PACKAGE 1: WASHINGTON PARK
PLAYGROUND, SPORTS COURT, AND PICNIC AREA

850 BURLINGAME AVENUE, BURLINGAME, CA 94010
CITY OF BURLINGAME PROJECT NUMBER: 85670
BID SET: MARCH 25, 2019

PROJECT TEAM

ARCHITECT:
GROUP 4 ARCHITECTURE RESEARCH + PLANNING:
211 LINDEN AVENUE
SOUTH SAN FRANCISCO, CA 94080
T: (650) 871-0709
F: (650) 871-7911

CONTACT: DAWN MERKES

CIVIL:
BKF
1730 N. FIRST STREET, SUITE 600
SAN JOSE, CA 95112
T: (408) 467 9126

CONTACT: SCOTT SCHORK

LANDSCAPE:
RHAA
323 GEARY STREET
SAN FRANCISCO, CA 94102
T: (415) 861 7900

CONTACT: JAMES INGELS

ELECTRICAL & LIGHTING:
O'MAHONY & MYER
4340 REDWOOD HWY, STE 245
SAN RAFAEL, CA 94903
T: (415) 492 0420
F: (415) 479 9662

CONTACT: PAUL CAREY

PROJECT SCOPE OF WORK:

PACKAGE 1: WASHINGTON PARK PLAYGROUND, SPORTS COURT, AND PICNIC AREA
THE PROPOSED PROJECT CONSISTS OF THE FOLLOWING:
- PLAYGROUND AREA
- SPORTS COURT
- PICNIC AREA
- ASSOCIATED SITEWORK AND LANDSCAPING

PACKAGE 2: BURLINGAME COMMUNITY CENTER (NOT IN THIS CONTRACT)
- COMMUNITY CENTER
- ASSOCIATED SITEWORK AND LANDSCAPING
- SURFACE / UNDERGROUND PARKING

LOCATION MAP:

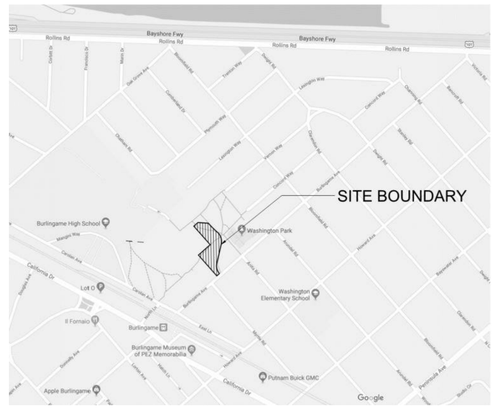

SHEET INDEX

A0.0	COVER SHEET & SHEET INDEX	L0.0	LANDSCAPE NOTES & LEGEND	ES0.1	SYMBOLS LIST, GENERAL NOTES, LIST OF DRAWINGS, LUMINAIRE SCHEDULE
A1.1-0	SITE PLAN	L0.1	KEY PLAN	ES1.1	SITE PLAN - ELECTRICAL
C1.0	GENERAL NOTES	L1.0	TREE PROTECTION & REMOVAL PLAN	ES7.1	DETAILS
C2.0	EXISTING CONDITIONS	L1.1	TREE PROTECTION & REMOVAL PLAN	ES8.1	TITLE 24 DOCUMENTS
C3.0	DEMOLITION PLAN	L2.0	ACCESSIBILITY PLAN		
C4.0	GRADING AND DRAINAGE PLAN	L3.1	CONSTRUCTION PLAN		
C5.0	UTILITY PLAN	L3.2	CONSTRUCTION PLAN		
C6.0	STORM WATER CONTROL PLAN	L4.0	CONSTRUCTION DETAILS		
C7.0	STORM WATER CONTROL DETAILS	L4.1	CONSTRUCTION DETAILS		
C8.0	EROSION CONTROL PLAN	L4.2	CONSTRUCTION DETAILS		
C9.0	EROSION CONTROL DETAILS	L5.1	LAYOUT PLAN		
C10.0	CONSTRUCTION DETAILS	L5.2	LAYOUT PLAN		
C11.0	CROSS SECTIONS	L6.0	IRRIGATION NOTES & LEGEND		
C12.0	BEST MANAGEMENT PRACTICES	L6.1	IRRIGATION PLAN		
		L6.2	IRRIGATION PLAN		
		L6.3	IRRIGATION DETAILS		
		L6.4	IRRIGATION DETAILS		
		L6.5	IRRIGATION DETAILS		
		L6.6	IRRIGATION DETAILS		
		L6.7	IRRIGATION WATER USE CALCULATIONS		
		L7.0	PLANTING NOTES & LEGEND		
		L7.1	TREE PLAN		
		L7.2	PLANTING PLAN		
		L7.3	PLANTING PLAN		
		L7.4	PLANTING DETAILS		

GROUP 4
ARCHITECTURE
RESEARCH +
PLANNING, INC
211 LINDEN AVENUE
SO. SAN FRANCISCO
CA 94080 USA
650·871·0709

WASHINGTON PARK PLAYGROUND, SPORTS COURT, AND PICNIC AREA

850 BURLINGAME AVE BURLINGAME CA 94010

JAMES HARTMAN
No. C-30361
REN 07-31-2019
ARCHITECT
STATE OF CALIFORNIA

Project Arch.	----
CA REG.	----
PROJECT:	12421-04

ISSUE	DATE
SCHEMATIC DESIGN	11/02/18
BID SET	3/25/2019

REVISION #	DATE

SHEET TITLE AND NO.
COVER SHEET & SHEET INDEX

A0.0

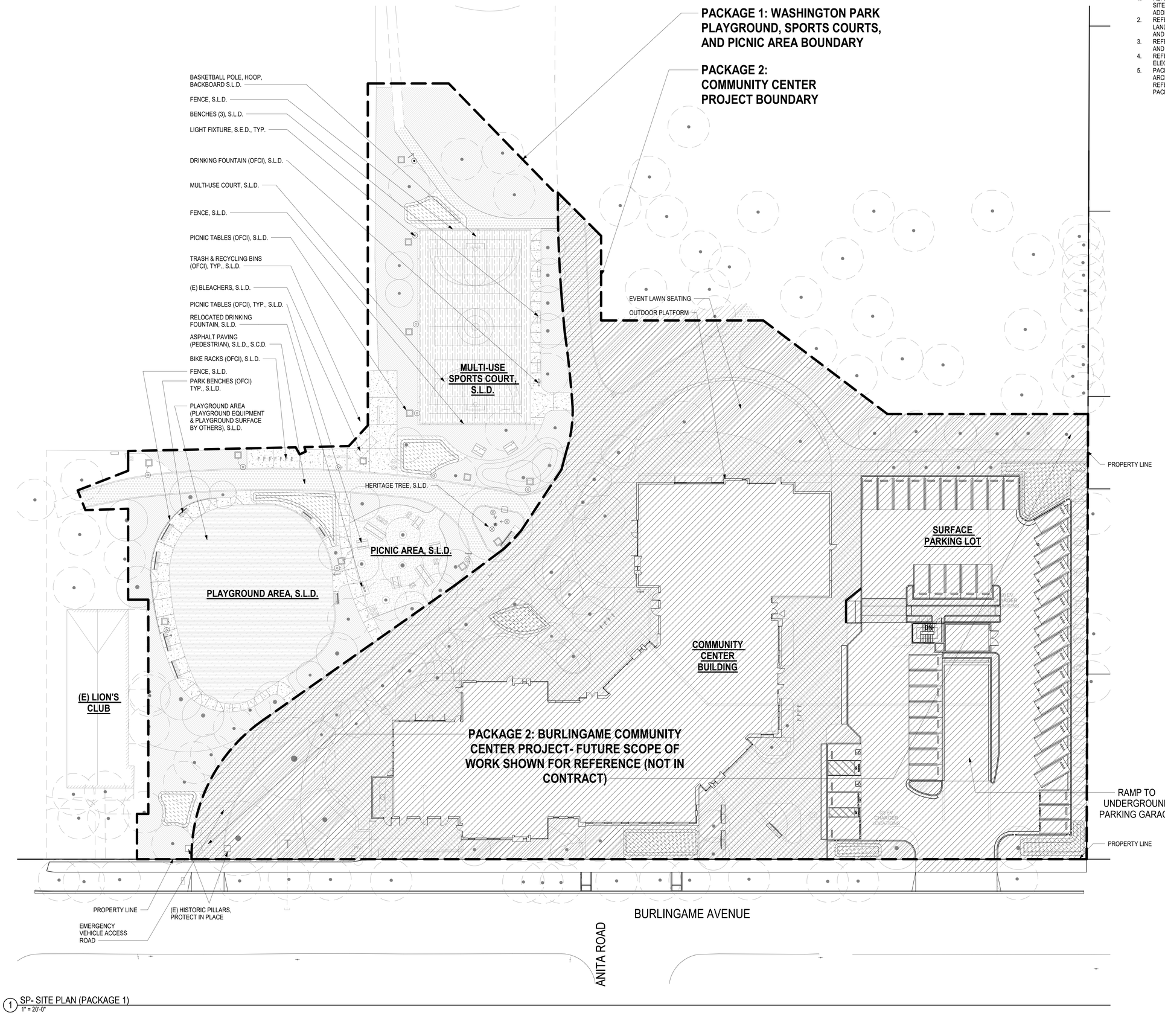

1 SP- SITE PLAN (PACKAGE 1)
1" = 20'-0"

SHEET NOTES

1. REFER TO CIVIL FOR HORIZONTAL CONTROLS, SITE GRADING, UTILITY LOCATIONS AND ADDITIONAL SITE INFORMATION.
2. REFER TO LANDSCAPE FOR SITE FURNISHINGS, LANDSCAPE LAYOUT, PLANTING, IRRIGATION AND ADDITIONAL SITE INFORMATION.
3. REFER TO LANDSCAPE FOR TREE REMOVAL AND TREE PROTECTION PLAN
4. REFER TO ELECTRICAL FOR SITE LIGHTING AND ELECTRICAL INFORMATION
5. PACKAGE 2 SCOPE OF WORK SHOWN ON THIS ARCHITECTURAL SITE PLAN IS SHOWN FOR REFERENCE ONLY AND SHOWS PROPOSED PACKAGE 2 PROJECT SCOPE.

GROUP 4
ARCHITECTURE RESEARCH + PLANNING, INC
211 LINDEN AVENUE
SO. SAN FRANCISCO
CA 94080 USA
650·871·0709

WASHINGTON PARK PLAYGROUND, SPORTS COURT, AND PICNIC AREA

850 BURLINGAME AVE
BURLINGAME
CA 94010

HARTMAN
No. C-30361
REN 07-31-2019
ARCHITECT
STATE OF CALIFORNIA

Project Arch.	....
CA REG.	....
PROJECT:	12421-04

ISSUE	DATE
SCHEMATIC DESIGN	11/02/18
BID SET	3/25/2019

REVISION #	DATE

SHEET TITLE AND NO.
SITE PLAN

A1.1-0

GENERAL NOTES

1. ALL WORK SHALL BE DONE IN ACCORDANCE WITH THESE PLANS, SPECIAL PROVISIONS, THE CITY OF BURLINGAME DEPARTMENT OF PUBLIC WORKS STANDARD SPECIFICATIONS FOR PUBLIC IMPROVEMENTS, AND CALTRANS STANDARD PLANS AND SPECIFICATIONS DATED 2010.
2. CONSTRUCTION CONTRACTOR AGREES THAT IN ACCORDANCE WITH GENERALLY ACCEPTED CONSTRUCTION PRACTICES, CONSTRUCTION CONTRACTOR WILL BE REQUIRED TO ASSUME SOLE AND COMPLETE RESPONSIBILITY FOR JOB SITE CONDITIONS DURING THE COURSE OF CONSTRUCTION OF THE PROJECT, INCLUDING SAFETY OF ALL PERSONS AND PROPERTY; THAT THIS REQUIREMENT SHALL BE MADE TO APPLY CONTINUOUSLY AND NOT BE LIMITED TO NORMAL WORKING HOURS; AND CONSTRUCTION CONTRACTOR FURTHER AGREES TO DEFEND, INDEMNIFY AND HOLD THE OWNER AND FREYER & LAURETA, INC. HARMLESS FROM ANY AND ALL LIABILITY, REAL OR ALLEGED, IN CONNECTION WITH PERFORMANCE OF WORK ON THE PROJECT.
3. IT SHALL BE THE REASONABILITY OF THE CONTRACTOR TO COORDINATE WITH THE APPROPRIATE UTILITY COMPANIES AND TO OBTAIN ANY PERMITS REQUIRED BY THE CITY OF BURLINGAME AND OTHER AGENCIES IN ORDER TO DO THE WORK SHOWN ON THESE PLANS.
4. THE CITY ENGINEER SHALL BE NOTIFIED IN WRITING FIVE (5) DAYS PRIOR TO COMMENCING CONSTRUCTION OPERATIONS. THE CONTRACTOR SHALL GIVE THE CITY OF BURLINGAME ENGINEERING DEPARTMENT AT LEASE THREE (3) WORKING DAYS ADVANCE NOTICED PRIOR TO BEGINNING OF ACTUAL WORK AND ALL REQUIRED INSPECTION REQUESTS, AT (650)588-7230.
5. THE LOCATIONS OF EXISTING UNDERGROUND UTILITIES AND TOPOGRAPHIC FEATURES ARE SHOWN IN AN APPROXIMATE WAY ONLY AND HAVE NOT BEEN INDEPENDENTLY VERIFIED BY THE OWNER OR ITS REPRESENTATIVE. THE CONTRACTOR SHALL DETERMINE THE TRUE LOCATION OF ALL EXISTING UTILITIES RELATIVE TO THE TOPOGRAPHIC FEATURES BEFORE COMMENCING WORK AND AGREES TO BE FULLY RESPONSIBLE FOR ANY AND ALL DAMAGES WHICH MIGHT BE OCCASIONED BY THE CONTRACTOR'S FAILURE TO EXACTLY LOCATE AND PRESERVE ANY AND ALL UNDERGROUND UTILITIES, BUILDINGS AND WALLS. THE CONTRACTOR SHALL NOTIFY THE UTILITY COMPANIES THAT WILL BE AFFECTED BY THE WORK TO OBTAIN ASSISTANCE IN LOCATING EXISTING MAINS AND SERVICE CONNECTIONS. A LIST OF MAJOR UTILITY COMPANIES WITH KNOWN EXISTING UNDERGROUND UTILITIES IN THE AREA IS:

UTILITY COMPANY	UTILITY	TELEPHONE NO.
PG&E	GAS	650-598-7437
PG&E	ELECTRIC	650-598-7379
AT&T	TELEPHONE	408-493-7237
CITY OF BURLINGAME	WATER, SANITARY SEWER, & STORM	650-558-7670 650-558-7679

PRIOR TO ANY DIGGING CALL U.S.A. (800) 642-2444 OR 811 48 HOURS IN ADVANCE TO HAVE EXISTING UNDERGROUND FACILITIES MARKED.

6. THE CONTRACTOR SHALL COORDINATE THE CONSTRUCTION OPERATION WITH ALL THE UTILITIES COMPANIES WHICH ARE TO RELOCATE OR INSTALL THEIR UTILITIES TO ACHIEVE AN EFFICIENT SCHEDULE OF OPERATIONS THAT DOES NOT DELAY CONSTRUCTION.
7. AS PART OF THEIR PRE-BID INSPECTION, BIDDERS SHALL VISIT THE SITE AND NOTE THE TYPE AND LOCATION OF OVERHEAD UTILITIES IN THE PROPOSED WORK AREA. BIDDERS PRICE SHALL INCLUDE PROVISIONS FOR WORKING IN AREAS WHERE OVERHEAD UTILITIES EXIST AT THE TIME OF BIDDING, WHETHER SHOWN ON THE PLAN OR NOT, AND NO ADDITIONAL COMPENSATION IS ALLOWED.
8. THE CONTRACTOR SHALL NOTIFY THE CITY ENGINEER OF ANY DISCREPANCIES OR UNUSUAL CONDITIONS ASSOCIATED WITH THE PLANS, DETAILS OR CONSTRUCTION NOTES FIVE (5) DAYS PRIOR TO FINALIZATION OF BIDS AND COMMENCEMENT OF ANY CONSTRUCTION.
9. IT SHALL BE THE CONTRACTOR'S RESPONSIBILITY TO PROTECT ANY SURVEYING MONUMENTS FOUND WITHIN PROJECT AREA, AND FURTHER THE CONTRACTOR SHALL SHALL BE FINANCIALLY RESPONSIBLE FOR RESETTING MONUMENTS DAMAGED OR DESTROYED BY THE CONSTRUCTION OPERATIONS.
10. HORIZONTAL AND VERTICAL DIMENSIONS PROVIDED ON THE DRAWINGS ARE BASED ON FIELD MEASUREMENTS. ADJUSTMENTS MAY BE MADE BY THE ENGINEER DURING CONSTRUCTION. PAYMENT WILL BE BASED ON QUANTITIES INSTALLED.
11. REFER TO SPECIFICATIONS FOR TRAFFIC CONTROL RESTRICTIONS AND HOURS OF WORK.
12. THE CONTRACTOR SHALL MAINTAIN ACCESS TO ALL DRIVEWAYS AND FOOT TRAFFIC AT ALL TIMES EXCEPT WHEN PRECLUDED BY NECESSARY CONSTRUCTION, AS NOTED IN CALTRANS TRAFFIC MANUAL AND AS APPROVED BY THE CITY ENGINEER OR RESIDENT TO CLOSE ACCESS.
13. THE CONTRACTOR SHALL PROVIDE ALL LIGHTS, SIGNS, BARRICADES, FLAGMAN OR OTHER DEVICES NECESSARY TO PROVIDE FOR PUBLIC SAFETY IN ACCORDANCE WITH THE SPECIAL PROVISIONS.
14. THE CONTRACTOR SHALL BE HELD RESPONSIBLE FOR ANY FIELD CHANGES MADE WITHOUT PRIOR WRITTEN AUTHORIZATION FROM THE CITY ENGINEER.
15. UPON SATISFACTORY COMPLETION OF THE WORK, THE ENTIRE WORK SITE SHALL BE CLEANED AND LEFT FREE OF CONSTRUCTION WASTE, RUBBISH AND DEBRIS OF ANY NATURE TO THE SATISFACTION OF THE CITY ENGINEER.
16. CONSTRUCTION STAKING TO BE PROVIDED BY THE CONTRACTOR. CONSTRUCTOR SHALL MAINTAIN STAKING POINTS AT ALL TIMES DURING CONSTRUCTION.
17. NOTES APPEARING ON THESE PANS SHALL BE CONSIDERED AS REFERRING TO INCIDENTAL WORK REQUIRED FOR THE ACTIVITIES SPECIFICALLY LISTED IN THE BID SCHEDULE. NO ADDITIONAL COMPENSATION SHALL BE ALLOWED FOR ACTIVITIES OTHER THAN THOSE LISTED IN THE BID SCHEDULE.
18. THE CONTRACTOR SHALL PROVIDE ALL MATERIALS, LABOR, EQUIPMENT AND APPARATUS NOT SPECIFICALLY MENTIONED ON THE PLANS OR SPECIFICATIONS, BUT WHICH ARE NECESSARY TO COMPLETE THE CONTRACTED WORK.
19. THE CONTRACTOR SHALL SUPPLY AND MAINTAIN SANITARY FACILITIES FOR THE WORKERS AT THE CONSTRUCTION SITE.
20. THE CONTRACTOR SHALL SATISFY THEMSELVES AS TO THE CORRECTNESS OF THE EXISTING TOPOGRAPHY, UTILITIES, AND EXISTING CONDITIONS PRIOR TO BIDDING THE PROJECT.
21. TREES AND SHRUBS WITHIN THE CITY RIGHT-OF-WAY AND ON PRIVATE PROPERTY ADJACENT TO THE PROJECT WORK, NOTED ON THE PLANS TO BE PROTECTED, SHALL BE PROTECTED FROM DAMAGE DURING CONSTRUCTION. CONTRACTOR SHALL DEVELOP METHODS TO WORK AROUND THE TREES.
22. CONTRACTOR TO CONTACT CITY ENGINEER, INSPECTOR, AND CITY ARBORIST TO IDENTIFY TREES TO BE PRUNED OR REMOVED FROM CITY EASEMENT AS REQUIRED FOR ACCESS TO PROJECT AREA.
23. CONTRACTOR IS RESPONSIBLE FOR SELECTING THE MEANS, METHODS, AND EQUIPMENT TO CONSTRUCT THE IMPROVEMENTS IDENTIFIED ON THE DRAWINGS.
24. THE PAVEMENT GRINDING MAY CONTAIN FABRIC, ENGINEERED PAVING MAT, OR OTHER CONTAMINATED MATERIALS IN SOME CITY STREETS. IT IS THE CONTRACTOR'S RESPONSIBILITY TO REMOVE AND DISPOSE OF THESE MATERIALS ALONG WITH THE GRINDING. THERE WILL BE NO ADDITIONAL COMPENSATION ALLOWED.

CONSTRUCTION NOTES

THE FOLLOWING CONTROL MEASURES FOR CONSTRUCTION ACTIVITIES SHALL BE ADHERED TO, UNLESS OTHERWISE APPROVED BY THE CITY ENGINEER.

1. NOT USED.
2. CONTRACTOR SHALL BE RESPONSIBLE FOR THE DISPOSAL OF ANY EXCESS MATERIALS FROM THE WORK SITE.
3. EROSION CONTROL MEASURES SHALL BE INSTALLED AS NECESSARY TO PREVENT SEDIMENT RUNOFF TO PUBLIC ROADWAY DRAINAGE FACILITIES, ADJACENT PROPERTIES AND THE SAN FRANCISCO BAY.
4. CONTRACTOR SHALL BE RESPONSIBLE FOR ANY DAMAGES ON OR OFF THE PROJECT SITE AS A RESULT OF LACK OF DUST CONTROL.
5. DURING THE PROGRESS OF THE CONSTRUCTION WORK THE CONTRACTOR SHALL MAINTAIN THE PREMISES IN A NEAT AND CLEAN CONDITION, DISPOSING OF REFUSE IN A SATISFACTORY MANNER AS OFTEN AS DIRECTED OR AS MAY BE NECESSARY SO THAT THERE SHALL BE AT NO TIME ANY UNSIGHTLY ACCUMULATION OF RUBBISH AT THE JOB SITE.
6. CONTRACTOR TO ADHERE TO ALL REQUIREMENTS OF THE SAN MATEO COUNTY HEALTH SERVICES AGENCY.
7. STORAGE OF CONSTRUCTION MATERIALS AND EQUIPMENT WILL NOT BE ALLOWED IN OR UPON THE PUBLIC RIGHT-OF-WAY. ALL MATERIALS INTENDED FOR USE ON ANY PROJECT SHALL BE OFF LOADED DIRECTLY FROM DELIVERY VEHICLES AND PLACED AS REQUIRED DURING THE COURSE OF CONSTRUCTION. SHOULD THE PERMIT HOLDER OR SUBCONTRACTORS WISH TO STOCKPILE MATERIALS NEAR THE WORK SITE, THEY SHALL MAKE ARRANGEMENTS IN ADVANCE FOR STORAGE. ALL STORAGE SITES SHALL BE SECURE, INACCESSIBLE TO THE GENERAL PUBLIC AND KEPT FREE OF CONSTRUCTION SPOILS, DEBRIS AND TRASH AT ALL TIMES STORAGE SITES SHALL BE SUBJECT TO THE REVIEW AND APPROVAL OF THE CITY ENGINEER.
8. CONTRACTOR SHALL COMPLY WITH THE RULES AND REGULATIONS OF THE STATE CONSTRUCTION SAFETY ORDERED.
9. THE CONTRACTOR SHALL PROVIDE ALL LIGHTS, SIGNS, BARRICADES, FLAG MEN OR OTHER DEVICES NECESSARY TO PROVIDE FOR PUBLIC SAFETY & TRAFFIC CONTROL.
10. THE CONTRACTOR SHALL POST EMERGENCY TELEPHONE NUMBERS FOR POLICE, FIRE, AMBULANCE, AND THOSE AGENCIES RESPONSIBLE FOR MAINTENANCE OF UTILITIES IN THE VICINITY OF JOB SITE.
11. THE CONTRACTOR SHALL IMMEDIATELY REPORT ANY SOIL OR WATER CONTAMINATION NOTICED DURING CONSTRUCTION TO THE CITY OF BURLINGAME FIRE DEPARTMENT HAZARDOUS MATERIALS DIVISION, THE SAN MATEO COUNTY DEPARTMENT OF HEALTH, AND THE CALIFORNIA REGIONAL WATER QUALITY CONTROL BOARD.
12. THE CONTRACTOR SHALL BE RESPONSIBLE FOR ANY DAMAGE TO THE SITE OR SURROUNDING AREA DUE TO DUST OR EROSION, RESULTING FROM WORK DONE BY THE CONTRACTOR. CONTRACTOR SHALL PROVIDE A SEVEN (7) DAY PHONE NUMBER TO RECEIVE AND RESPONSE TO DUST COMPLAINTS RESULTING FROM ALL CONSTRUCTION OPERATIONS AND SHALL BE MAINTAINED UNDER CONSTRUCTION IS COMPLETE. ALL BUSINESSES AND RESIDENTS WITHIN 300' OF THE PROJECT SHALL BE NOTIFIED BY THE CONTRACTOR BY MAIL WITH INFORMATION AND COMPLAINT LINES TO BE CALLED.
13. CONTRACTOR IS TO MAINTAIN ALL JOB SITE FACILITIES UNTIL ACCEPTED BY THE CITY.
14. ALL EXCAVATION SPOILS SHALL BE PLACED DIRECTLY INTO TRUCKS AND DISPOSED OF AT AN APPROVED DUMPSITE.
15. CONSTRUCTION HOURS IN THE CITY PUBLIC RIGHT-OF-WAY ARE LIMITED TO WEEKDAYS AND NON-CITY HOLIDAYS BETWEEN 8:00AM TO 5:00PM.
16. CONTRACTOR IS RESPONSIBLE FOR REPLACING ANY DAMAGED OR DISRUPTED STRIPING IN-KIND.
17. PETROMAT MAY BE FOUND IN THE AC. CONTRACTOR IS RESPONSIBLE FOR REMOBAL AND PROPER DISPOSAL.
18. ALL CURB AND GUTTER REPLACED SHALL HAVE A 2 FOOT SAWCUT CONFORM, UNLESS OTHERWISE NOTED ON PLANS.
19. SURVEY ELEVATIONS SHOWN ARE BASED ON ASSUMED BENCHMARKS. ELEVATIONS DO NO RELATE TO SEA LEVEL.
20. CONTRACTOR SHALL ADJUST ALL EXISTING SURFACE UTILITY FEATURES FOR ASPHALT AND CONCRETE REPAVING. UPON COMPLETION, UTILITY FEATURES SHALL BE SET FLUSH WITH NEW SURFACE GRADE. ADJUSTMENT OF ALL EXISTING SURFACE UTILITY FEATURES SHALL BE INCLUDED IN CONTRACTORS PRICE WHETHER OR NOT SPECIFICALLY CALLED OUT ON THE PLANS.
21. CONTRACTOR SHALL ACCOUNT FOR NECESSARY GROUNDWATER CONTROL.

CONCRETE GENERAL NOTES

1. SUBGRADE SHALL BE COMPACTED TO AL LEAST 95% RELATIVE COMPACTION. WHERE SUBGRADE CANNOT BE COMPACTED TO 95% REMEDIAL METHODS SHOWN SHALL BE INCORPORATED IN THE WORK.
2. WHERE UNSUITABLE SUBGRADE MATERIAL IS ENCOUNTERED, REMEDIAL WORK TO BE DONE UNDER THE DIRECTION OF THE CITY ENGINEER, INCLUDES BUT IS NOT LIMITED TO, REMOVING UNSUITABLE MATERIAL AND PLACING A LAYER OF GEOTECHNIC FABRIC AND CLASS 2 AGGREGATE BASE COMPACTED TO 95% UNDER THE INSTALLATION.
3. OVER-EXCAVATED SUBGRADE FOR GUTTER OR SIDEWALK SHALL BE BACK-FILLED WITH CLASS 2 AGGREGATE BASE MATERIAL.
4. EXISTING CONCRETE SHALL BE REMOVED AT EXPANSION OR WEAKENED PLANE JOINTS BY SAWCUTTING.
5. SAW CUTS MUST BE FILL DEPTH.
6. NEW WORK SHALL MATCH EXISTING IN SCORE AND COLOR.
7. SUBGRADE SHALL BE THOROUGHLY WETTED IMMEDIATELY PRIOR TO PLACING CONCRETE.
8. SEE PROJECT SPECIFICATIONS FOR CONCRETE TYPE AND FINISHES.
9. CONCRETE SHALL HAVE A SLUMP OF NOT MORE THAN 4 INCHES.
10. NO ADMIXTURES SHALL BE USED WITHOUT THE PERMISSION OF THE CITY ENGINEER.
11. 1/2-INCH THICK EXPANSION JOINTS SHALL BE PLACED ON BOTH SIDES OF DRIVEWAY APPROACHES, CURB, CUTTER AND SIDEWALK RETURN POINTS AND AT 20' FEET ON CENTER.
12. WEAKENED PLANE JOINTS AT LEAST 1-1/2 INCHES DEEP SHALL BE PLACED AT THE CENTER OF DRIVEWAYS AND 20' ON CENTER.
13. 1/4-INCH DEEP SCORE MARKS SHALL BE PLACED AS DESCRIBED IN THE STANDARD SPECIFICATIONS OR AS DIRECTED BY THE DIRECTED BY THE CITY ENGINEER.
14. NO CONCRETE SHALL BE PLACED UNTIL THE CITY ENGINEER OR HIS AUTHORIZED REPRESENTATIVE HAS INSPECTED AND APPROVED FORMS AND SUBGRADE.
15. ALL EXPOSED EDGES SHALL BE ROUNDED WITH 1/2-INCH RADIUS TOOL.
16. ALL SURFACES SHALL BE BROOM FINISHED FOR CURB AND GUTTER. REFER TO PROJECT SPECIFICATIONS FOR FLATWORK AND OTHER CONCRETE IMPROVEMENTS FINISHES.
17. CURBS, SIDEWALKS AND DRIVEWAY APPROACHES SHALL BE BACK FILLED WITHIN 7 DAYS AFTER PLACING CONCRETE. THIS SHALL INCLUDE ANY REQUIRED AC PATCHWORK.
18. FORM FACES SHALL NOT VARY FROM THE DIMENSIONS SHOWN BY MORE THAN .02 FEET. FORMS SHALL MEET GRADE.
19. UNLESS OTHERWISE SPECIFIED ON THE APPROVED PLANS, CONCRETE SHALL BE CURED BY MEANS OF THE IMPERVIOUS MEMBRANE METHOD.
20. ALL WORK WITHIN THE PUBLIC RIGHT-OF-WAY SHALL BE PERFORMED BY A STATE LICENSED "CLASS A" CONTRACTOR. A CONCRETE CONTRACTOR WITH A "C" LICENSE MAY PERFORM CONCRETE FLAT WORK.
21. A MINIMUM OF 12" OF ASPHALT SHALL BE REMOVED ALONG THE GUTTER LIP FOR THE INSTALLATION FOR FORMS. FOR CURB AND GUTTER INSTALLATIONS AC SHALL BE BROUGHT TO FINISH GRADE OF FORMS AND TRANSITIONS AS REQUIREMENT BY THE CITY ENGINEER.
22. ALL ASPHALT REPAIRS SHALL BE FLUSH WITH THE ADJACENT SURFACES AT CONFORMS AND EDGES. MAXIMUM ALLOWABLE TOLERANCES SHALL BE .01' LONGITUDINALLY AND .02' TRANSVERSELY.
23. ALL DRIVEWAYS, CURB AND GUTTER, AND SIDEWALK REPLACEMENTS SHALL BE PER CITY STANDARDS. CONTRACTOR IS RESPONSIBLE FOR UNDERSTANDING THESE DETAILS FOR PROPER BIDDING AND INSTALLATION.

UNDERGROUND NOTES

1. LOCATIONS OF EXISTING UNDERGROUND FACILITIES AND UTILITIES SHOWN ARE BASED ON AVAILABLE UTILITY COMPANY INFORMATION. IT IS THE CONTRACTOR'S RESPONSIBILITY TO VERIFY THE ACTUAL LOCATION OF UTILITIES PRIOR TO THE COMMENCEMENT OF WORK. THE CONTRACTOR SHALL CONTACT UNDERGROUND SERVICE ALERT (U.S.A.) AT (800)227-2600 AT LEAST 48 HOURS IN ADVANCE OF ANY EXCAVATING.
2. PHYSICAL VERIFICATION OF UTILITY LOCATION SHALL BE PERFORMED BY POT HOLING OR HAND DIGGING AND CAREFUL SUBSURFACE PROBING IN CONFORMANCE WITH ARTICLE 6 OF THE CAL/OSHA CONSTRUCTION SAFETY ORDERS. ANY DEVIATIONS FROM LOCATIONS SHOWN ON PLANS SHALL BE BROUGHT TO THE ENGINEER'S ATTENTION BEFORE STARTING CONSTRUCTION.
3. EXISTING UTILITIES ARE SHOWN PER AVAILABLE INFORMATION. THERE MAY BE ADDITIONAL EXISTING LINE NOT SHOWN ON THE PLANS. CONTRACTOR SHALL BE CAREFUL TO AVOID ANY DAMAGE TO THESE UTILITY SERVICES.
4. ALL EXISTING UTILITIES AND IMPROVEMENTS THAT BECOME DAMAGED DURING CONSTRUCTION SHALL BE COMPLETELY RESTORED TO THE SATISFACTION OF THE CITY ENGINEER AND THE UTILITY OWNER AT THE CONTRACTOR'S SOLE EXPENSE.
5. MAIN UTILITIES, OTHER THAN WATER, SANITARY SEWER, AND STORM IN CONFLICT WITH THE WORK WILL BE RELOCATED BY OTHERS. WATER MAINS, SANITARY SEWER MAINS, STORM DRAINS AND THEIR SERVICES REQUIRED TO BE TEMPORARILY OR PERMANENTLY RELOCATED FOR CONSTRUCTION OF PROPOSED IMPROVEMENTS SHALL BE RELOCATED BY THE CONTRACTOR.

PATH OF TRAVEL

1. WALKS AND SIDEWALKS TO HAVE A CONTINUOUS COMMON SURFACE NOT INTERRUPTED BY STEPS OR BY ABRUPT CHANGES IN LEVEL EXCEEDING 1/4 INCH AND BE A MINIMUM OF 4 FEET IN WIDTH.
2. SURFACE CROSS SLOPES TO NOT EXCEED 1:48.
3. WALKS, SIDEWALKS, AND PEDESTRIAN WAYS TO BE FREE OF GRATINGS WHENEVER POSSIBLE. FOR GRATINGS LOCATED IN THE SURFACE OF ANY OF THESE AREAS, GRID OPENINGS IN GRATINGS TO BE LIMITED TO 1/2 INCH IN THE DIRECTION OF TRAVEL. GRATINGS WITH ELONGATED OPENINGS TO BE PLACED PERPENDICULAR TO PATH OF TRAVEL.
4. WHEN THE SLOPE IN THE DIRECTION OF TRAVEL OF ANY WALK EXCEEDS 1 VERTICAL TO 20 HORIZONTAL, OR 5%, IT MUST COMPLY WITH THE PROVISIONS FOR PEDESTRIAN RAMPS.
5. ABRUPT CHANGES IN LEVEL ALONG ANY ACCESSIBLE ROUTE NOT TO EXCEED 1/4 INCH. WHEN CHANGES IN LEVEL DO OCCUR, THEY MUST BE BEVELED WITH A SLOPE NO GREATER THAN 1:2 EXCEPT THAT LEVEL CHANGES NOT EXCEEDING 1/4 INCH MAY BE VERTICAL WHEN CHANGES IN LEVEL GREATER THAN 1/2 INCH ARE NECESSARY COMPLY WITH THE REQUIREMENTS FOR CURB RAMPS.

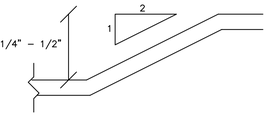

ENGINEER'S STATEMENT

THESE PLANS HAVE BEEN PREPARED BY ME OR UNDER MY DIRECTION IN ACCORDANCE WITH STANDARD ENGINEERING PRACTICE.

REGISTERED PROFESSIONAL ENGINEER PATRICK CHAN C 83189 CIVIL STATE OF CALIFORNIA

PATRICK CHAN, P.E. — DATE
ASSOCIATE
BKF ENGINEERS

THESE PLANS HAVE BEEN PREPARED BY ME OR UNDER MY SUPERVISION IN ACCORDANCE WITH STANDARD ENGINEERING PRACTICE.

REGISTERED PROFESSIONAL ENGINEER PHONG KIET C 78237 CIVIL STATE OF CALIFORNIA

PHONG KIET, P.E. — DATE
PROJECT MANAGER
BKF ENGINEERS

ABBREVIATIONS

AC	ASPHALTIC CONCRETE
AD	AREA DRAIN
BFP	BACKFLOW PREVENTER
BLDG	BUILDING
BW	BACK OF WALK
CL DR	CENTERLINE DOOR
CLF	CHAIN LINK FENCE
COB	CITY OF BURLINGAME
CONC	CONCRETE
COR	CORNER
DI	DROP INLET
EG	EXISTING GRADE
EP	EDGE OF PAVEMENT
ETW	EDGE OF TRAVEL WAY
EX.	EXISTING
FC	FACE OF CURB
FF	FINISHED FLOOR
FD	FOUND
FDC	FIRE DEPARTMENT CONNECTION
FL	FLOW LINE
GB	GRADE BREAK
GND	GROUND
HP	HIGH POINT
INV	INVERT
IRR	IRRIGATION
IP	IRON PIPE
JP	JOINT POLE
LG	LIP OF GUTTER
LID	LOW IMPACT DEVELOPMENT
N.A.P.	NOT A PART
(N)	NEW
OU	ORIGIN UNKNOWN
PA	PERVIOUS AREA
PM	PARCEL MAP
PV	PAVEMENT
RC	RED CURB
ROW	RIGHT OF WAY
S.A.D.	SEE ARCHITECTURAL DRAWINGS
SD	STORM DRAIN
SDCO	STORM DRAIN CLEANOUT
SDMH	STORM DRAIN MANHOLE
SF	SQUARE FEET
S.L.D.	SEE LANDSCAPE DRAWINGS
SS	SANITARY SEWER
SSMH	SANITARY SEWER MANHOLE
SSCO	SANITARY SEWER CLEANOUT
S.T.D.	SEE STRUCTURAL DRAWINGS
SW	SIDEWALK
TC	TOP OF CURB
TRC	TOP OF ROLLED CURB
TYP.	TYPICAL
U.B.	UTILITY BOX
UPRR	UNION PACIFIC RAILROAD
VIF	VERIFY IN FIELD
W	WATER
WM	WATER METER
WV	WATER VALVE

SHEET INDEX

C1.0	GENERAL NOTES
C2.0	EXISTING CONDITIONS
C3.0	DEMOLITION PLAN
C4.0	GRADING AND DRAINAGE PLAN
C5.0	UTILITY PLAN
C6.0	STORM WATER CONTROL PLAN
C7.0	STORM WATER CONTROL DETAILS
C8.0	EROSION CONTROL PLAN
C9.0	EROSION CONTROL DETAILS
C10.0	CONSTRUCTION DETAILS
C11.0	CROSS SECTIONS
C12.0	BEST MANAGEMENT PRACTICES

PACKAGE 1

GROUP 4 ARCHITECTURE RESEARCH + PLANNING, INC
211 LINDEN AVENUE
SO. SAN FRANCISCO
CA 94080 USA
650 871 0709

BKF ENGINEERS / SURVEYORS / PLANNERS
1730 N. FIRST ST.
SUITE 600
SAN JOSE, CA 95112
408-467-9100
408-467-9199 (FAX)

WASHINGTON PARK PLAYGROUND, SPORTS COURT, AND PICNIC AREA

850 BURLINGAME AVE
BURLINGAME
CA 94010

REGISTERED PROFESSIONAL ENGINEER PHONG KIET C 78237 CIVIL STATE OF CALIFORNIA

Project Arch.	----
CA REG.	----
PROJECT:	12421-04

ISSUE	DATE
SD SUBMITTAL	11/02/18
BID SET	03/25/19

SHEET TITLE AND NO.

GENERAL NOTES

C1.0

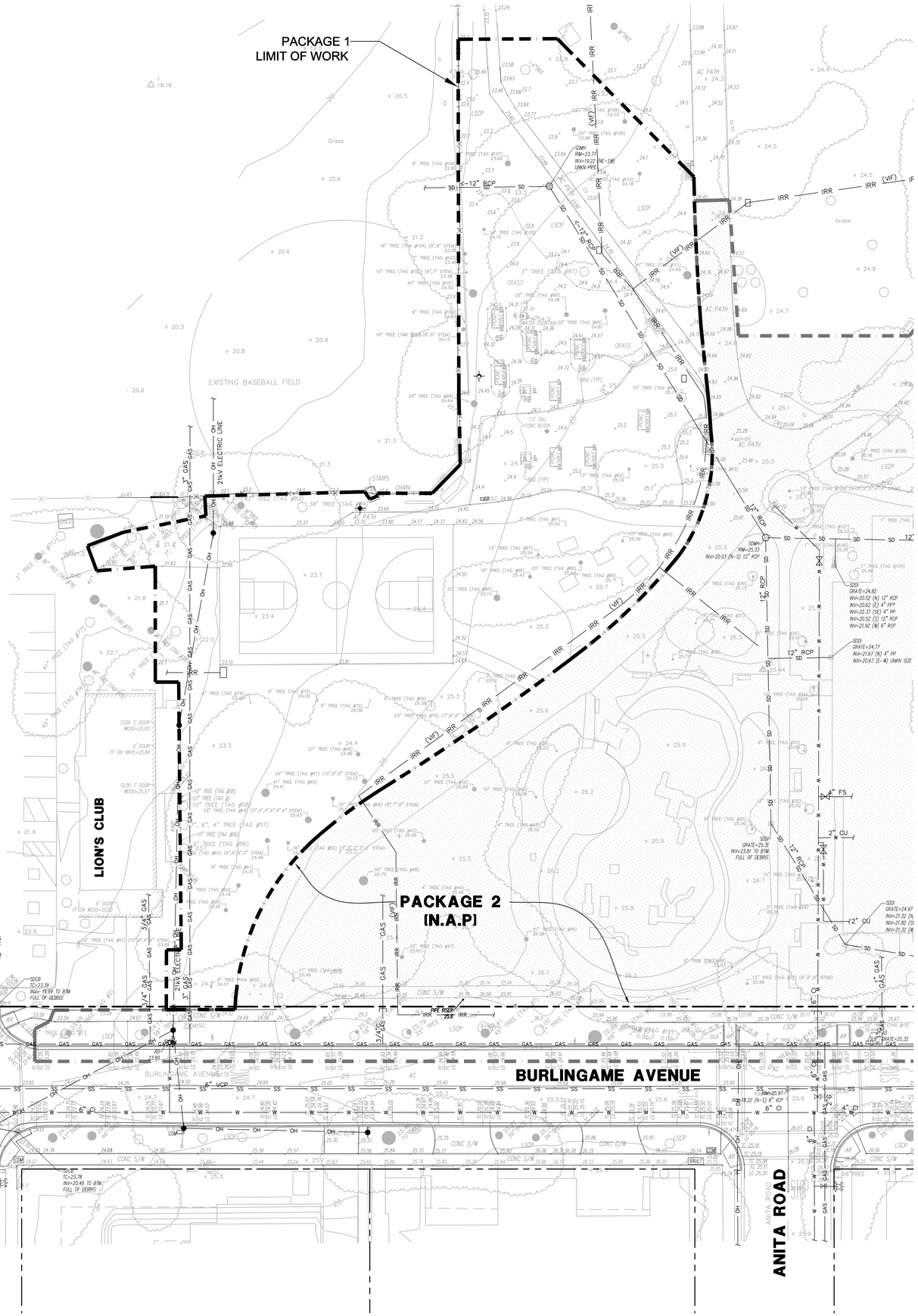

LEGEND:

SD SD SD	(E) STORMDRAIN PIPE
SS SS SS	(E) SANITARY SEWER PIPE
W W W	(E) WATER PIPE
IRR IRR IRR	(E) IRRIGATION WATER PIPE, VERIFIED IN FIELD (VIF)
GAS GAS GAS	(E) GAS PIPE
E E E	(E) ELECTRICAL UNDERGROUND LINE
OH OH OH	(E) ELECTRICAL OVERHEAD LINE
	(E) FIRE HYDRANT
	(E) ELECTROLIER (BASEBALL FIELD)
	(E) JOINT POLE

GRAPHIC SCALE

(IN FEET)
1 inch = 20 ft.

PACKAGE 1

GROUP 4 ARCHITECTURE RESEARCH + PLANNING, INC
211 LINDEN AVENUE
SO. SAN FRANCISCO
CA 94080 USA
650 871 0709

BkF ENGINEERS / SURVEYORS / PLANNERS
1730 N. FIRST ST.
SUITE 600
SAN JOSE, CA 95112
408-467-9100
408-467-9199 (FAX)

WASHINGTON PARK PLAYGROUND, SPORTS COURT, AND PICNIC AREA

850 BURLINGAME AVE
BURLINGAME
CA 94010

REGISTERED PROFESSIONAL ENGINEER — CIVIL — STATE OF CALIFORNIA

Project Arch.	----
CA REG.	----
PROJECT:	12421-04

ISSUE	DATE
SD SUBMITTAL	11/02/18
BID SET	03/25/19

SHEET TITLE AND NO.

EXISTING CONDITIONS

C2.0

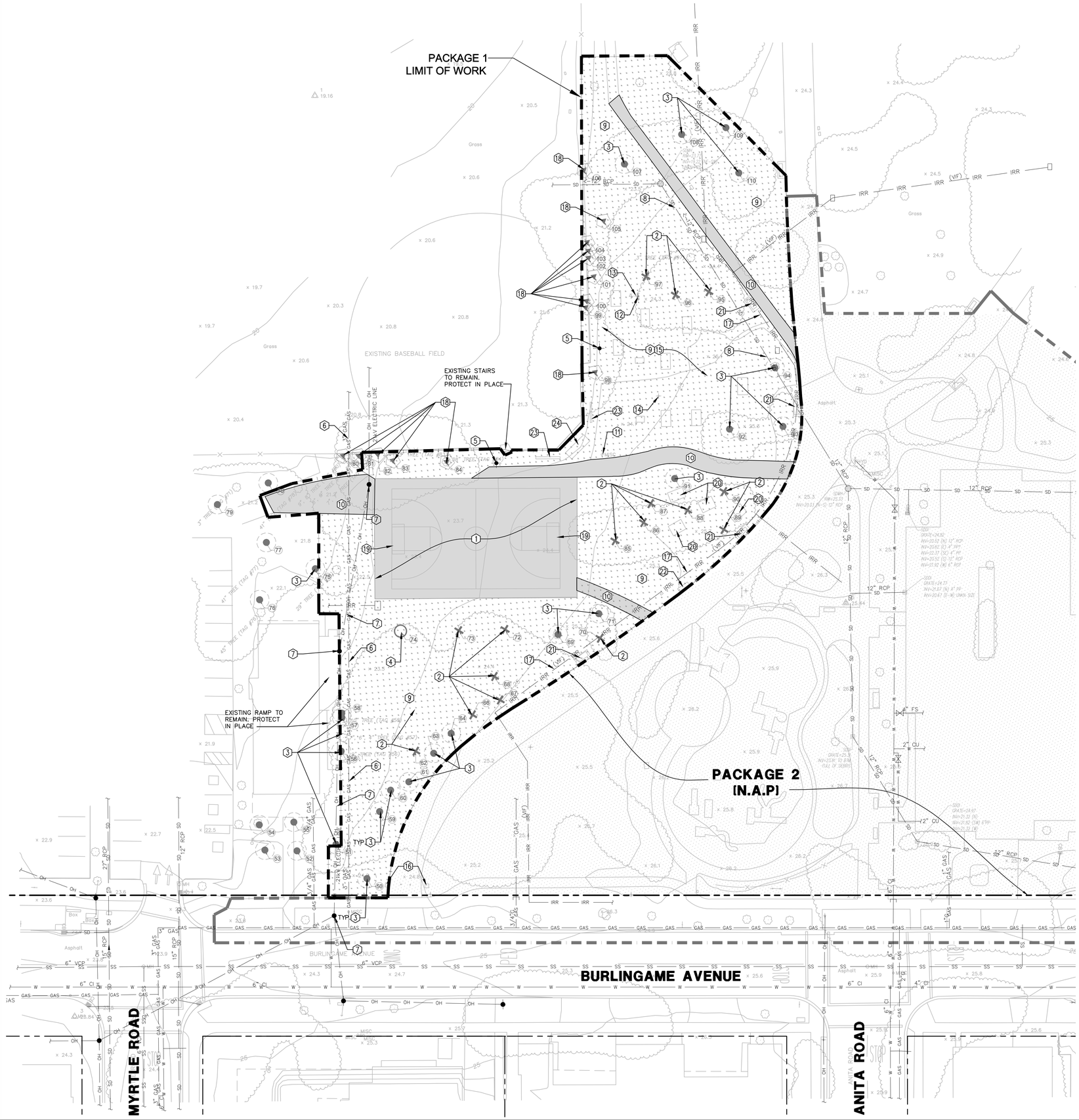

KEYED NOTES

1. REMOVE APHALT BASKETBALL COURT AND ASSOCIATED BASE ROCK.
2. REMOVE EXISTING TREE. SEE LANDSCAPE PLANS FOR ADDITIONAL INFORMATION.
3. PROTECT EXISTING TREE. SEE LANDSCAPE PLANS FOR ADDITIONAL INFORMATION.
4. EXISTING TREE TO BE RELOCATED BY CITY. SEE LANDSCAPE PLANS FOR ADDITIONAL INFORMATION.
5. PROTECT EXISTING ELECTROLIERS.
6. PROTECT EXISTING GAS LINE.
7. PROTECT EXISTING ELECTRIC OVERHEAD LINES AND JOINT POLES.
8. PROTECT EXISTING STORM DRAIN LINE.
9. CLEAR AND GRUB EXISTING VEGETATION AND PLANTING AREA.
10. REMOVE ASPHALT PATH AND ASSOCIATED BASE ROCK.
11. ELECTRICAL BOX TO REMAIN. PROTECT IN PLACE ADJUST TO NEW GRADE
12. REMOVE WATER FOUNTAIN
13. REMOVE AREA DRAIN
14. REMOVE PARK LIGHT. EXISTING LIGHT POLE TOP TO BE SALVAGED
15. REMOVE PICNIC TABLES.
16. EXISTING HISTORICAL PILLAR TO REMAIN. PROTECT IN PLACE
17. PROTECT EXISTING IRRIGATION LINE.
18. EXISTING TREE TO BE REMOVED BY CITY. SEE LANDSCAPE PLANS FOR ADDITIONAL INFORMATION.
19. EXISTING BASKETBALL BACKBOARDS TO BE SALVAGED (2)
20. EXISTING PICNIC TABLES TO BE SALVAGED (4)
21. EXISTING BENCH TO BE SALVAGED (4)
22. REMOVE EXISTING BENCH
23. EXISTING BLEACHERS BENCH TOP TO BE SALVAGED (2)
24. EXISTING BLEACHERS TO BE SALVAGED (1)

DEMOLITION LEGEND

- EXISTING PROPERTY LINE
- EXISTING LOT LINE
- LIMIT OF WORK
- VEGETATION AND PLANTING AREA
- ASPHALT PAVING
- BUILDING STRUCTURE
- PLAYGROUND
- TREES TO BE PROTECTED
- TREES TO BE REMOVED
- TREES TO BE RELOCATED BY CITY PRIOR TO PACKAGE 1 PROJECT
- TREES TO BE REMOVED BY CITY PRIOR TO PACKAGE 1 PROJECT
- REMOVE EXISTING UTILITY

CITY NOTE

CITY OF BURLINGAME PARKS DIVISION TO PICK UP ITEMS TO BE SALVAGED AT THE TIME WHEN THE CONSTRUCTION FENCE WILL BE INSTALLED AND PRIOR TO THE SITE DEMOLITION.

CONTRACTOR TO NOTIFY CITY 72 HOURS PRIOR TO WHEN CONSTRUCTION FENCE WILL BE INSTALLED AND COORDINATE/PROVIDE ACCESS TO THE SITE FOR REMOVAL OF ITEMS TO BE SALVAGED.

ITEMS TO BE REMOVED AND SALVAGE INCLUDE:

1. TRASH AND RECYCLING RECEPTACLES (8)
2. TOP FIXTURE ON THE LIGHT POLE (1)
3. BASKETBALL BACKBOARDS (2)
4. PICNIC AREA SIGN BOARD (1)
5. NEWER STYLE DUMOR BENCHES (4)
6. NEWER STYLE PICNIC TABLES (4)

GRAPHIC SCALE

(IN FEET)
1 inch = 20 ft.

PACKAGE 1

GROUP 4 ARCHITECTURE RESEARCH + PLANNING, INC
211 LINDEN AVENUE
SO. SAN FRANCISCO
CA 94080 USA
650 871 0709

BkF ENGINEERS / SURVEYORS / PLANNERS
1730 N. FIRST ST.
SUITE 600
SAN JOSE, CA 95112
408-467-9100
408-467-9199 (FAX)

WASHINGTON PARK PLAYGROUND, SPORTS COURT, AND PICNIC AREA

850 BURLINGAME AVE
BURLINGAME
CA 94010

REGISTERED PROFESSIONAL ENGINEER — CIVIL — STATE OF CALIFORNIA

Project Arch.	----
CA REG.	----
PROJECT:	12421-04

ISSUE	DATE
SD SUBMITTAL	11/02/18
BID SET	03/25/19

SHEET TITLE AND NO.

DEMOLITION PLAN

C3.0

KEYED NOTES

1. INSTALL ASPHALT PEDESTRIAN PATH (2.5"AC/7"AB CL. II). S.L.D. FOR FINISH SURFACE
2. INSTALL CONCRETE PEDESTRIAN PATH (4"PCC/4"AB CL. II). S.L.D. FOR FINISHED SURFACE AND JOINTS
3. INSTALL BIORETENTION AREA PER DETAIL 1, SEE SHEET C10.0
4. ADJUST EXISTING ELECTRICAL BOX TO NEW GRADE

GRADING LEGEND

- EXISTING PROPERTY LINE
- EXISTING LOT LINE
- LIMIT OF WORK
- G.B. — GRADE BREAK
- BIORETENTION AREA
- ASPHALT PAVING (PEDESTRIAN) (S.L.D.)
- PEDESTRIAN CONCRETE (4" AC/4"AB)
- MULTI-USE COURT ASPHALT + ACRYLIC COLOR COATING (S.L.D.)
- (EG 23.9±) CONFORM — EXISTING ELEVATION
- TC 25.24 / FL 24.74 — PROPOSED ELEVATION
- CC 25.24 / FL 24.74 — PROPOSED TOP OF CURB ELEVATION AT CURB CUT
- RUNOFF DIRECTION
- STORMDRAIN CATCH BASIN
- STORMDRAIN JUNCTION BOX
- STORMDRAIN BUBBLER
- STORMDRAIN AREA DRAIN
- STORMDRAIN MANHOLE
- STORMDRAIN CLEANOUT
- STORMDRAIN OVERLAND RELEASE

GRAPHIC SCALE

20 0 10 20 40 80

(IN FEET)
1 inch = 20 ft.

PACKAGE 1

G R O U 4 P
ARCHITECTURE
RESEARCH +
PLANNING, INC
211 LINDEN AVENUE
SO. SAN FRANCISCO
CA 94080 USA
650 871 0709

BkF
ENGINEERS / SURVEYORS / PLANNERS
1730 N. FIRST ST.
SUITE 600
SAN JOSE, CA 95112
408-467-9100
408-467-9199 (FAX)

THE CITY OF BURLINGAME CALIFORNIA INCORPORATED 1908

WASHINGTON PARK PLAYGROUND, SPORTS COURT, AND PICNIC AREA

850 BURLINGAME AVE
BURLINGAME
CA 94010

REGISTERED PROFESSIONAL ENGINEER PHONG KIET C78237 CIVIL STATE OF CALIFORNIA

Project Arch.	----
CA REG.	----
PROJECT:	12421-04

ISSUE	DATE
SD SUBMITTAL	11/02/18
BID SET	03/25/19

SHEET TITLE AND NO.

GRADING AND DRAINAGE PLAN

C4.0

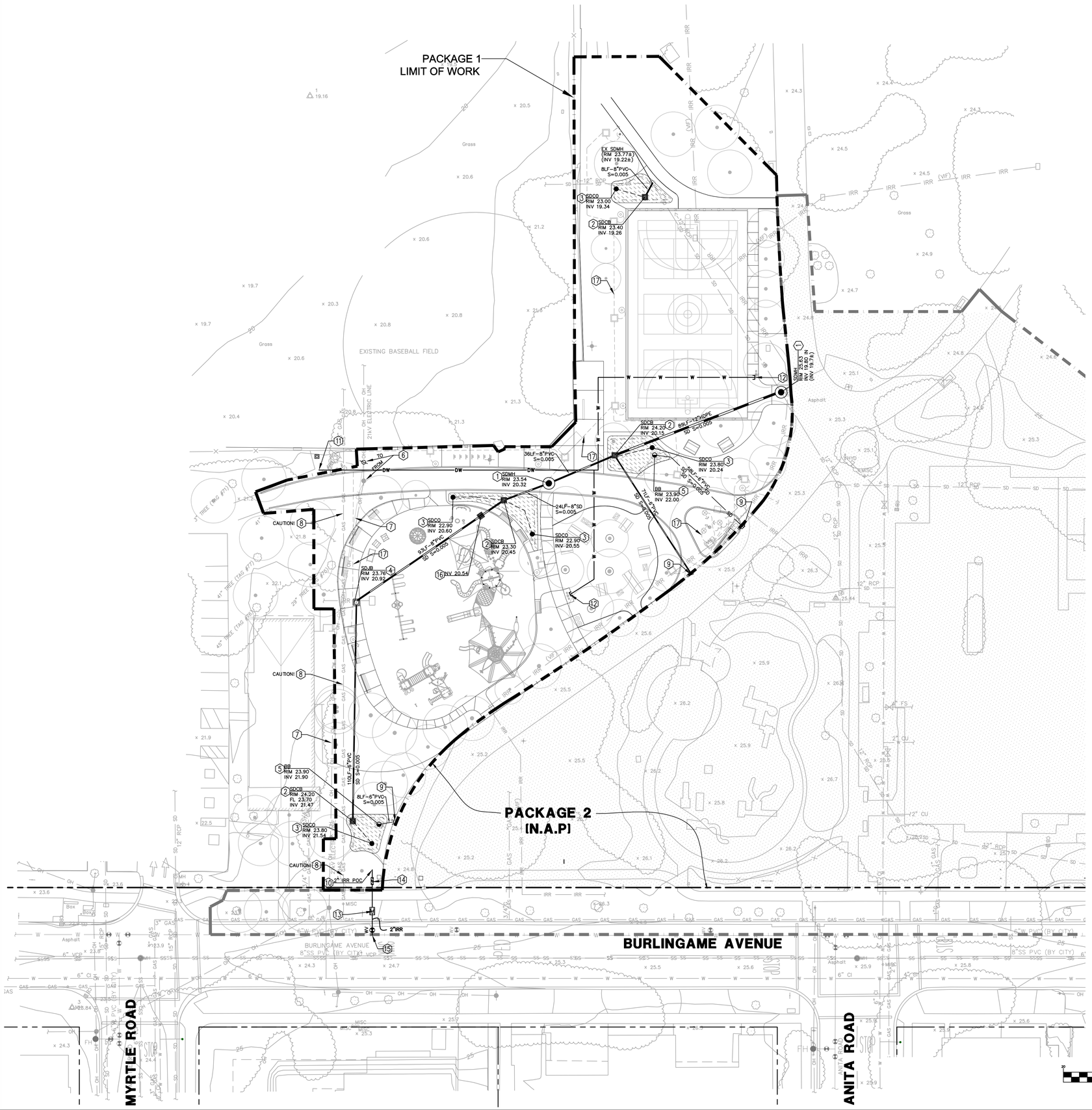

KEYNOTES

1. INSTALL STORM DRAIN MANHOLE
2. INSTALL STORM OVERFLOW DRAIN RISER PER DETAIL 5, SHEET C10.0
3. INSTALL STORM DRAIN CLEANOUT PER DETAIL 2, SHEET C10.0
4. INSTALL STORM DRAIN JUNCTION BOX PER DETAIL 3, SHEET C10.0. STORM DRAIN JUNCTION BOX TO HAVE NON SKID LID
5. INSTALL BUBBLER BOX PER DETAIL 4, SHEET C10.0
6. RELOCATE JOINT POLE (BY OTHERS)
7. EXISTING OVERHEAD ELECTRICAL LINE TO REMAIN
8. EXISTING GAS LINE TO REMAIN. PROTECT IN PLACE
9. PROVIDE STUB-OUT FOR FUTURE CONNECTION
10. SEE IRRIGATION PLANS FOR CONTINUATION
11. CONTRACTOR TO CONNECT NEW WATER LINE TO THE EXISTING WATER LINE SUPPLYING WATER TO THE EXISTING DRINKING FOUNTAIN
12. WATER CONNECTION TO DRINKING FOUNTAIN (S.L.D.)
13. INSTALL 2" WATER METER
14. INSTALL 2" BACKFLOW PREVENTER
15. INSTALL 2" WATER SERVICE (IRRIGATION)
16. SUBGRADE DRAIN INLET, S.L.D. FOR DETAILS
17. ELECTRICAL LINES SHOWN FOR REFERENCE ONLY. SEE ELECTRICAL DRAWINGS FOR MORE INFORMATION

UTILITY LEGEND

- PROPERTY LINE
- LOT LINE
- LIMIT OF WORK
- SANITARY LINE
- STORM DRAIN LINE
- W — W — WATER LINE
- FW — FW — FW — FIRE WATER LINE
- JT — JOINT TRENCH (BY OTHERS)
- GAS SERVICE (BY OTHERS)
- PERFORATED PIPE WITHIN BIORETENTION BASIN
- DIRT SWALE FLOW LINE
- OFD/CB — OVER FLOW DRAIN/CATCH BASIN
- SDJB — STORM DRAIN JUNCTION BOX
- BB — STORM DRAIN BUBBLER BOX
- CI — STORM DRAIN CURB INLET
- SDAD — STORM DRAIN AREA DRAIN
- SDMH — STORM DRAIN MANHOLE
- SDCO — STORM DRAIN CLEANOUT
- SANITARY SEWER MANHOLE
- SANITARY SEWER CLEANOUT
- SANITARY SEWER AREA DRAIN
- WV — WATER VALVE
- BO — BLOW OFF VALVE
- M — WATER METER
- BFP — BACKFLOW PREVENTOR
- BIORETENTION BASIN
- SURFACE FLOW DIRECTION

GRAPHIC SCALE
20 0 10 20 40 80
(IN FEET)
1 inch = 20 ft.

PACKAGE 1

GROUP
ARCHITECTURE
RESEARCH +
PLANNING, INC
211 LINDEN AVENUE
SO. SAN FRANCISCO
CA 94080 USA
650 871 0709

BKF
ENGINEERS / SURVEYORS / PLANNERS
1730 N. FIRST ST.
SUITE 600
SAN JOSE, CA 95112
408-467-9100
408-467-9199 (FAX)

WASHINGTON PARK PLAYGROUND, SPORTS COURT, AND PICNIC AREA

850 BURLINGAME AVE
BURLINGAME
CA 94010

REGISTERED PROFESSIONAL ENGINEER — CIVIL — STATE OF CALIFORNIA

Project Arch.	----
CA REG.	----
PROJECT:	12421-04

ISSUE	DATE
SD SUBMITTAL	11/02/18
BID SET	03/25/19

SHEET TITLE AND NO.

UTILITY PLAN

C5.0

STORMWATER CONTROL LEGEND

- EXISTING PROPERTY LINE
- EXISTING LOT LINE
- LIMIT OF WORK
- DRAINAGE MANAGEMENT AREA
- BIORETENTION BASIN
- RUNOFF DIRECTION
- STORMDRAIN OVERFLOW DRAIN
- STORMDRAIN JUNCTION BOX
- STORMDRAIN BUBBLER
- STORMDRAIN AREA DRAIN
- STORMDRAIN MANHOLE
- STORMDRAIN CLEANOUT

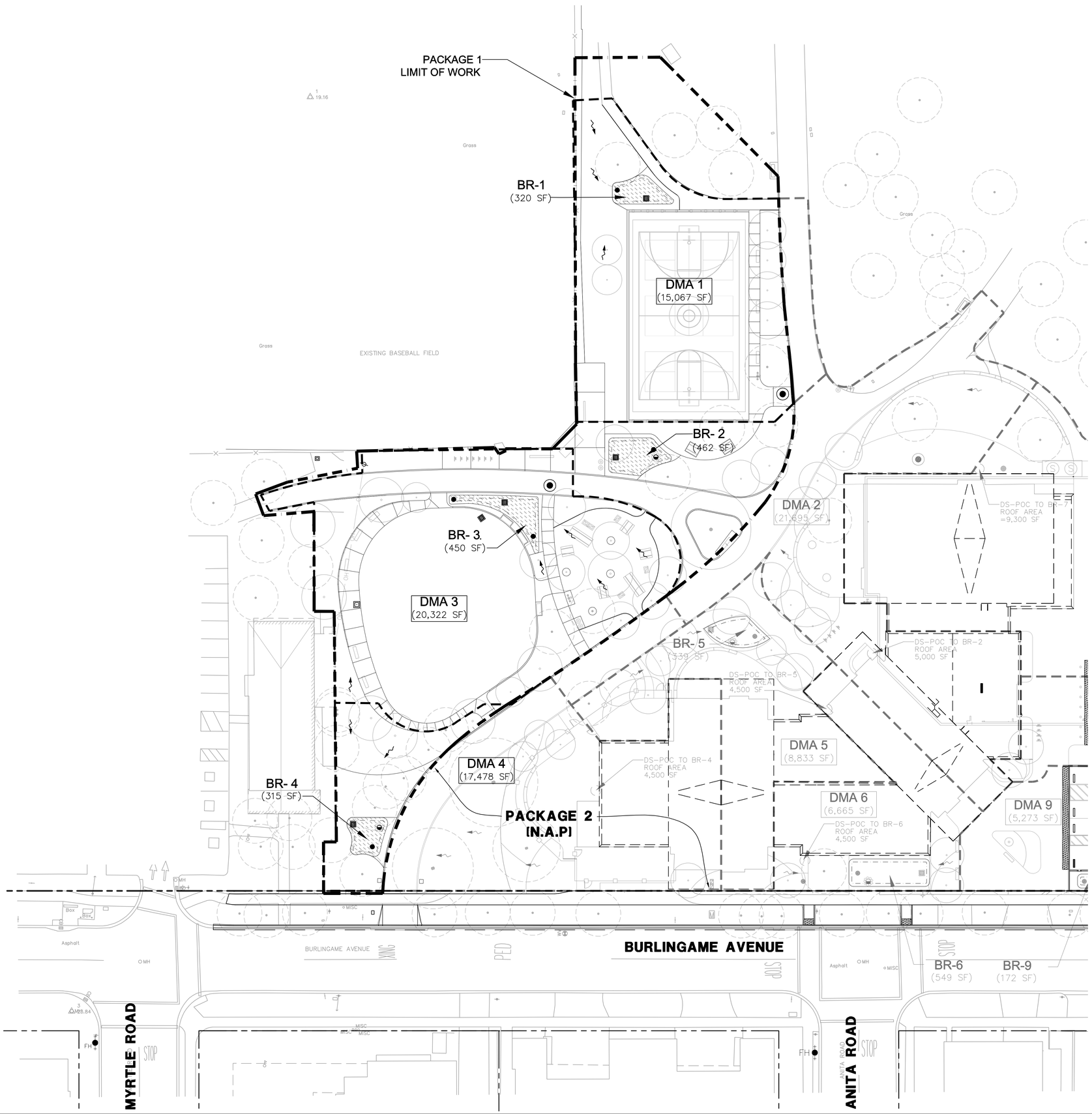

GRAPHIC SCALE

(IN FEET)
1 inch = 20 ft.

PACKAGE 1

GROUP
ARCHITECTURE
RESEARCH +
PLANNING, INC
211 LINDEN AVENUE
SO. SAN FRANCISCO
CA 94080 USA
650 871 0709

BkF
ENGINEERS / SURVEYORS / PLANNERS
1730 N. FIRST ST.
SUITE 600
SAN JOSE, CA 95112
408-467-9100
408-467-9199 (FAX)

WASHINGTON PARK PLAYGROUND, SPORTS COURT, AND PICNIC AREA

850 BURLINGAME AVE
BURLINGAME
CA 94010

REGISTERED PROFESSIONAL ENGINEER
DAVID R. BOTTS
C76524
CIVIL
STATE OF CALIFORNIA

Project Arch.	----
CA REG.	----
PROJECT:	12421-04

ISSUE	DATE
SD SUBMITTAL	11/02/18
BID SET	03/25/19

SHEET TITLE AND NO.

STORM WATER CONTROL PLAN

C6.0

Worksheet for Calculating the Combination Flow and Volume Method

Instructions: After completing Section 1, make a copy of this Excel file for each Drainage Management Area within the project. Enter information specific to the project and DMA in the cells shaded in yellow. Cells shaded in light blue contain formulas and values that will be automatically calculated.

1.0 Project Information

1-1	Project Name:	BURLINGAME COMM CENTER	
1-2	City application ID:		
1-3	Site Address or APN:	980-990 BURLINGAME	
1-4	Tract or Parcel Map No:		
1-5	Rainfall Region	6	
1-6	Region Mean Annual Precipitation (MAP)	20.10	
1-7	Site Mean Annual Precipitation (MAP)	22	

The calculations presented here are based on the **combination flow and volume sizing method** provided in the Countywide Program's C.3 Technical Guidance, Version 5.0 (2016). The steps presented below are explained in Section 5.1 of the Guidance, applicable portions of which are included in this file, in the sheet named 'Guidance from Chapter 5'.

Click here for map

1-8 ***MAP adjustment factor is automatically calculated as:*** **1.09**

[The "Site Mmin Annual Precipitation (MAP)" is divided by the MAP for the applicable rain gauge, shown in Table 5-3, below.]
Refer to the map in Appendix C of the C.3 Technical Guidance to identify the Rainfall Region for the site.

2.0 Calculate Percentage of Impervious Surface for Drainage Management Area (DMA)

2-1 Name of DMA: **DMA1**

For items 2-2 and 2-3, enter the areas in square feet for each type of surface within the DMA.

	Type of Surface	Area of surface type within DMA (Sq. Ft.)	Adjust Pervious Surface	Effective Impervious Area
2-2	Impervious surface	9,947	1.0	9,947
2-3	Pervious surface	5,120	0.1	512
	Total DMA Area (square feet) =	15,067		
2-4		***Total Effective Impervious Area (EIA)***	10,459	**Square feet**

3.0 Calculate Unit Basin Storage Volume in Inches

Table 5-3. Unit Basin Storage Volumes in Inches for 80 Percent Capture Using 48-Hour Drawdowns, based on runoff coefficient

Region	Station, and Mean Annual Precipitation (Inches)	Runoff Coefficient of 1.0
1	Boulder Creek, 55.9"	2.04"
2	La Honda, 24.4"	0.86"
3	Half Moon Bay, 25.92"	0.82"
4	Palo Alto, 14.6"	0.44"
5	San Francisco, 21.0"	0.73"
6	San Francisco airport, 20.1"	0.85"
7	San Francisco Oceanside, 19.3"	0.72"

3-1 ***Unit basin storage volume from Table 5-3*** **0.85**

[The coefficient for this method is always 1.0, due to the conversion of any landscaping to effective impervious area.]

3-2 ***Adjusted unit basin storage volume:*** **0.93** Inches

[The unit basin storage volume (Item 3-1) is adjusted by applying the MAP adjustment factor (Item 1-8).]

3-3 ***Required Capture Volume (in cubic feet):*** **811** Cubic feet

[The adjusted unit basin sizing volume (Item 3-2) is multiplied by the DMA EIA (Item 2-4) and converted to cubic feet.]

4.0 Calculate the Duration of the Rain Event

4-1	Rainfall Intensity	0.2	Inches per hour
4-2	Divide Item 3-2 by Item 4-1	4.65	Hours of Rain Event Duration

5.0 Preliminary Estimate of Surface Area of Treatment Measure

5-1	4% of DMA EIA (Item 2-4)		418.36	Square feet
5-2	Area 25% smaller than Item 5-1 (i.e., 3% of DMA EIA)		313.77	Square feet
5-3	Volume of treated runoff for area in Item 5-2		608.16	Cubic feet (Item 5-2 * 5 inches per hour * 1/12 * Item 4-2)

6.0 Initial Adjustment of Depth of Surface Ponding Area

6-1	Subtract Item 5-3 from Item 3-3	202.72	Cubic feet (Amount of runoff to be stored in ponding area)
6-2	Divide Item 6-1 by Item 5-2	0.65	Feet (Depth of stored runoff in surface ponding area)
6-3	Convert Item 6-2 from feet to inches	7.75	Inches (Depth of stored runoff in surface ponding area)
6-4	If ponding depth in Item 6-3 meets your target depth (recommend 6"), skip to Item 8-1. If not, continue to Step 7-1.		
	(Note: Overflow outlet elevation should be set based on the calculated ponding depth.)		

7.0 Optimize Size of Treatment Measure

7-1	Enter an area larger than Item 5-2	320	Sq.ft. (enter larger area if you need less ponding depth.)
7-2	Volume of treated runoff for area in Item 7-1	620.23	Cubic feet (Item 7-1 * 5 inches per hour * 1/12 * Item 4-2)
7-3	Subtract Item 7-2 from Item 3-3	190.64	Cubic feet (Amount of runoff to be stored in ponding area)
7-4	Divide Item 7-3 by Item 7-1	0.60	Feet (Depth of stored runoff in surface ponding area)
7-5	Convert Item 7-4 from ft. to inches	7.15	Inches (Depth of stored runoff in surface ponding area)
7-6	If the ponding depth in Item 7-5 meets target, stop here. If not, repeat Steps 7-1 through 7-5 until you obtain target depth.		
	(Note: Overflow outlet elevation should be set based on the calculated ponding depth.)		

8.0 Surface Area of Treatment Measure for DMA

8-1	Final surface area of treatment	320	Square feet (Either Item 5-2 or final amount in Item 7-1)

Worksheet for Calculating the Combination Flow and Volume Method

Instructions: After completing Section 1, make a copy of this Excel file for each Drainage Management Area within the project. Enter information specific to the project and DMA in the cells shaded in yellow. Cells shaded in light blue contain formulas and values that will be automatically calculated.

1.0 Project Information

1-1	Project Name:	BURLINGAME COMM CENTER	
1-2	City application ID:		
1-3	Site Address or APN:	980-990 BURLINGAME	
1-4	Tract or Parcel Map No:		
1-5	Rainfall Region	6	
1-6	Region Mean Annual Precipitation (MAP)	20.10	
1-7	Site Mean Annual Precipitation (MAP)	22	

The calculations presented here are based on the **combination flow and volume sizing method** provided in the Countywide Program's C.3 Technical Guidance, Version 5.0 (2016). The steps presented below are explained in Section 5.1 of the Guidance, applicable portions of which are included in this file, in the sheet named 'Guidance from Chapter 5'.

Click here for map

1-8 ***MAP adjustment factor is automatically calculated as:*** **1.09**

[The "Site Mmin Annual Precipitation (MAP)" is divided by the MAP for the applicable rain gauge, shown in Table 5-3, below.]
Refer to the map in Appendix C of the C.3 Technical Guidance to identify the Rainfall Region for the site.

2.0 Calculate Percentage of Impervious Surface for Drainage Management Area (DMA)

2-1 Name of DMA: **DMA2**

For items 2-2 and 2-3, enter the areas in square feet for each type of surface within the DMA.

	Type of Surface	Area of surface type within DMA (Sq. Ft.)	Adjust Pervious Surface	Effective Impervious Area
2-2	Impervious surface	13,747	1.0	13,747
2-3	Pervious surface	7,948	0.1	795
	Total DMA Area (square feet) =	21,695		
2-4		***Total Effective Impervious Area (EIA)***	14,542	**Square feet**

3.0 Calculate Unit Basin Storage Volume in Inches

Table 5-3. Unit Basin Storage Volumes in Inches for 80 Percent Capture Using 48-Hour Drawdowns, based on runoff coefficient

Region	Station, and Mean Annual Precipitation (Inches)	Runoff Coefficient of 1.0
1	Boulder Creek, 55.9"	2.04"
2	La Honda, 24.4"	0.86"
3	Half Moon Bay, 25.92"	0.82"
4	Palo Alto, 14.6"	0.44"
5	San Francisco, 21.0"	0.73"
6	San Francisco airport, 20.1"	0.85"
7	San Francisco Oceanside, 19.3"	0.72"

3-1 ***Unit basin storage volume from Table 5-3*** **0.85**

[The coefficient for this method is always 1.0, due to the conversion of any landscaping to effective impervious area.]

3-2 ***Adjusted unit basin storage volume:*** **0.93** Inches

[The unit basin storage volume (Item 3-1) is adjusted by applying the MAP adjustment factor (Item 1-8).]

3-3 ***Required Capture Volume (in cubic feet):*** **1,127** Cubic feet

[The adjusted unit basin sizing volume (Item 3-2) is multiplied by the DMA EIA (Item 2-4) and converted to cubic feet.]

4.0 Calculate the Duration of the Rain Event

4-1	Rainfall Intensity	0.2	Inches per hour
4-2	Divide Item 3-2 by Item 4-1	4.65	Hours of Rain Event Duration

5.0 Preliminary Estimate of Surface Area of Treatment Measure

5-1	4% of DMA EIA (Item 2-4)		581.672	Square feet
5-2	Area 25% smaller than Item 5-1 (i.e., 3% of DMA EIA)		436.254	Square feet
5-3	Volume of treated runoff for area in Item 5-2		845.56	Cubic feet (Item 5-2 * 5 inches per hour * 1/12 * Item 4-2)

6.0 Initial Adjustment of Depth of Surface Ponding Area

6-1	Subtract Item 5-3 from Item 3-3	281.85	Cubic feet (Amount of runoff to be stored in ponding area)
6-2	Divide Item 6-1 by Item 5-2	0.65	Feet (Depth of stored runoff in surface ponding area)
6-3	Convert Item 6-2 from feet to inches	7.75	Inches (Depth of stored runoff in surface ponding area)
6-4	If ponding depth in Item 6-3 meets your target depth (recommend 6"), skip to Item 8-1. If not, continue to Step 7-1.		
	(Note: Overflow outlet elevation should be set based on the calculated ponding depth.)		

7.0 Optimize Size of Treatment Measure

7-1	Enter an area larger than Item 5-2	462	Sq.ft. (enter larger area if you need less ponding depth.)
7-2	Volume of treated runoff for area in Item 7-1	895.46	Cubic feet (Item 7-1 * 5 inches per hour * 1/12 * Item 4-2)
7-3	Subtract Item 7-2 from Item 3-3	231.95	Cubic feet (Amount of runoff to be stored in ponding area)
7-4	Divide Item 7-3 by Item 7-1	0.50	Feet (Depth of stored runoff in surface ponding area)
7-5	Convert Item 7-4 from ft. to inches	6.02	Inches (Depth of stored runoff in surface ponding area)
7-6	If the ponding depth in Item 7-5 meets target, stop here. If not, repeat Steps 7-1 through 7-5 until you obtain target depth.		
	(Note: Overflow outlet elevation should be set based on the calculated ponding depth.)		

8.0 Surface Area of Treatment Measure for DMA

8-1	Final surface area of treatment	462	Square feet (Either Item 5-2 or final amount in Item 7-1)

Worksheet for Calculating the Combination Flow and Volume Method

Instructions: After completing Section 1, make a copy of this Excel file for each Drainage Management Area within the project. Enter information specific to the project and DMA in the cells shaded in yellow. Cells shaded in light blue contain formulas and values that will be automatically calculated.

1.0 Project Information

1-1	Project Name:	BURLINGAME COMM CENTER	
1-2	City application ID:		
1-3	Site Address or APN:	980-990 BURLINGAME	
1-4	Tract or Parcel Map No:		
1-5	Rainfall Region	6	
1-6	Region Mean Annual Precipitation (MAP)	20.10	
1-7	Site Mean Annual Precipitation (MAP)	22	

The calculations presented here are based on the **combination flow and volume sizing method** provided in the Countywide Program's C.3 Technical Guidance, Version 5.0 (2016). The steps presented below are explained in Section 5.1 of the Guidance, applicable portions of which are included in this file, in the sheet named 'Guidance from Chapter 5'.

Click here for map

1-8 ***MAP adjustment factor is automatically calculated as:*** **1.09**

[The "Site Mmin Annual Precipitation (MAP)" is divided by the MAP for the applicable rain gauge, shown in Table 5-3, below.]
Refer to the map in Appendix C of the C.3 Technical Guidance to identify the Rainfall Region for the site.

2.0 Calculate Percentage of Impervious Surface for Drainage Management Area (DMA)

2-1 Name of DMA: **DMA3**

For items 2-2 and 2-3, enter the areas in square feet for each type of surface within the DMA.

	Type of Surface	Area of surface type within DMA (Sq. Ft.)	Adjust Pervious Surface	Effective Impervious Area
2-2	Impervious surface	7,730	1.0	7,730
2-3	Pervious surface	12,592	0.1	1,259
	Total DMA Area (square feet) =	20,322		
2-4		***Total Effective Impervious Area (EIA)***	8,989	**Square feet**

3.0 Calculate Unit Basin Storage Volume in Inches

Table 5-3. Unit Basin Storage Volumes in Inches for 80 Percent Capture Using 48-Hour Drawdowns, based on runoff coefficient

Region	Station, and Mean Annual Precipitation (Inches)	Runoff Coefficient of 1.0
1	Boulder Creek, 55.9"	2.04"
2	La Honda, 24.4"	0.86"
3	Half Moon Bay, 25.92"	0.82"
4	Palo Alto, 14.6"	0.44"
5	San Francisco, 21.0"	0.73"
6	San Francisco airport, 20.1"	0.85"
7	San Francisco Oceanside, 19.3"	0.72"

3-1 ***Unit basin storage volume from Table 5-3*** **0.85**

[The coefficient for this method is always 1.0, due to the conversion of any landscaping to effective impervious area.]

3-2 ***Adjusted unit basin storage volume:*** **0.93** Inches

[The unit basin storage volume (Item 3-1) is adjusted by applying the MAP adjustment factor (Item 1-8).]

3-3 ***Required Capture Volume (in cubic feet):*** **697** Cubic feet

[The adjusted unit basin sizing volume (Item 3-2) is multiplied by the DMA EIA (Item 2-4) and converted to cubic feet.]

4.0 Calculate the Duration of the Rain Event

4-1	Rainfall Intensity	0.2	Inches per hour
4-2	Divide Item 3-2 by Item 4-1	4.65	Hours of Rain Event Duration

5.0 Preliminary Estimate of Surface Area of Treatment Measure

5-1	4% of DMA EIA (Item 2-4)		359.568	Square feet
5-2	Area 25% smaller than Item 5-1 (i.e., 3% of DMA EIA)		269.676	Square feet
5-3	Volume of treated runoff for area in Item 5-2		522.69	Cubic feet (Item 5-2 * 5 inches per hour * 1/12 * Item 4-2)

6.0 Initial Adjustment of Depth of Surface Ponding Area

6-1	Subtract Item 5-3 from Item 3-3	174.23	Cubic feet (Amount of runoff to be stored in ponding area)
6-2	Divide Item 6-1 by Item 5-2	0.65	Feet (Depth of stored runoff in surface ponding area)
6-3	Convert Item 6-2 from feet to inches	7.75	Inches (Depth of stored runoff in surface ponding area)
6-4	If ponding depth in Item 6-3 meets your target depth (recommend 6"), skip to Item 8-1. If not, continue to Step 7-1.		
	(Note: Overflow outlet elevation should be set based on the calculated ponding depth.)		

7.0 Optimize Size of Treatment Measure

7-1	Enter an area larger than Item 5-2	450	Sq.ft. (enter larger area if you need less ponding depth.)
7-2	Volume of treated runoff for area in Item 7-1	872.20	Cubic feet (Item 7-1 * 5 inches per hour * 1/12 * Item 4-2)
7-3	Subtract Item 7-2 from Item 3-3	-175.28	Cubic feet (Amount of runoff to be stored in ponding area)
7-4	Divide Item 7-3 by Item 7-1	-0.39	Feet (Depth of stored runoff in surface ponding area)
7-5	Convert Item 7-4 from ft. to inches	-4.67	Inches (Depth of stored runoff in surface ponding area)
7-6	If the ponding depth in Item 7-5 meets target, stop here. If not, repeat Steps 7-1 through 7-5 until you obtain target depth.		
	(Note: Overflow outlet elevation should be set based on the calculated ponding depth.)		

8.0 Surface Area of Treatment Measure for DMA

8-1	Final surface area of treatment	450	Square feet (Either Item 5-2 or final amount in Item 7-1)

Worksheet for Calculating the Combination Flow and Volume Method

Instructions: After completing Section 1, make a copy of this Excel file for each Drainage Management Area within the project. Enter information specific to the project and DMA in the cells shaded in yellow. Cells shaded in light blue contain formulas and values that will be automatically calculated.

1.0 Project Information

1-1	Project Name:	BURLINGAME COMM CENTER	
1-2	City application ID:		
1-3	Site Address or APN:	980-990 BURLINGAME	
1-4	Tract or Parcel Map No:		
1-5	Rainfall Region	6	
1-6	Region Mean Annual Precipitation (MAP)	20.10	
1-7	Site Mean Annual Precipitation (MAP)	22	

The calculations presented here are based on the **combination flow and volume sizing method** provided in the Countywide Program's C.3 Technical Guidance, Version 5.0 (2016). The steps presented below are explained in Section 5.1 of the Guidance, applicable portions of which are included in this file, in the sheet named 'Guidance from Chapter 5'.

Click here for map

1-8 ***MAP adjustment factor is automatically calculated as:*** **1.09**

[The "Site Mmin Annual Precipitation (MAP)" is divided by the MAP for the applicable rain gauge, shown in Table 5-3, below.]
Refer to the map in Appendix C of the C.3 Technical Guidance to identify the Rainfall Region for the site.

2.0 Calculate Percentage of Impervious Surface for Drainage Management Area (DMA)

2-1 Name of DMA: **DMA4**

For items 2-2 and 2-3, enter the areas in square feet for each type of surface within the DMA.

	Type of Surface	Area of surface type within DMA (Sq. Ft.)	Adjust Pervious Surface	Effective Impervious Area
2-2	Impervious surface	9,397	1.0	9,397
2-3	Pervious surface	8,081	0.1	808
	Total DMA Area (square feet) =	17,478		
2-4		***Total Effective Impervious Area (EIA)***	10,205	**Square feet**

3.0 Calculate Unit Basin Storage Volume in Inches

Table 5-3. Unit Basin Storage Volumes in Inches for 80 Percent Capture Using 48-Hour Drawdowns, based on runoff coefficient

Region	Station, and Mean Annual Precipitation (Inches)	Runoff Coefficient of 1.0
1	Boulder Creek, 55.9"	2.04"
2	La Honda, 24.4"	0.86"
3	Half Moon Bay, 25.92"	0.82"
4	Palo Alto, 14.6"	0.44"
5	San Francisco, 21.0"	0.73"
6	San Francisco airport, 20.1"	0.85"
7	San Francisco Oceanside, 19.3"	0.72"

3-1 ***Unit basin storage volume from Table 5-3*** **0.85**

[The coefficient for this method is always 1.0, due to the conversion of any landscaping to effective impervious area.]

3-2 ***Adjusted unit basin storage volume:*** **0.93** Inches

[The unit basin storage volume (Item 3-1) is adjusted by applying the MAP adjustment factor (Item 1-8).]

3-3 ***Required Capture Volume (in cubic feet):*** **791** Cubic feet

[The adjusted unit basin sizing volume (Item 3-2) is multiplied by the DMA EIA (Item 2-4) and converted to cubic feet.]

4.0 Calculate the Duration of the Rain Event

4-1	Rainfall Intensity	0.2	Inches per hour
4-2	Divide Item 3-2 by Item 4-1	4.65	Hours of Rain Event Duration

5.0 Preliminary Estimate of Surface Area of Treatment Measure

5-1	4% of DMA EIA (Item 2-4)		408.204	Square feet
5-2	Area 25% smaller than Item 5-1 (i.e., 3% of DMA EIA)		306.153	Square feet
5-3	Volume of treated runoff for area in Item 5-2		593.39	Cubic feet (Item 5-2 * 5 inches per hour * 1/12 * Item 4-2)

6.0 Initial Adjustment of Depth of Surface Ponding Area

6-1	Subtract Item 5-3 from Item 3-3	197.80	Cubic feet (Amount of runoff to be stored in ponding area)
6-2	Divide Item 6-1 by Item 5-2	0.65	Feet (Depth of stored runoff in surface ponding area)
6-3	Convert Item 6-2 from feet to inches	7.75	Inches (Depth of stored runoff in surface ponding area)
6-4	If ponding depth in Item 6-3 meets your target depth (recommend 6"), skip to Item 8-1. If not, continue to Step 7-1.		
	(Note: Overflow outlet elevation should be set based on the calculated ponding depth.)		

7.0 Optimize Size of Treatment Measure

7-1	Enter an area larger than Item 5-2	315	Sq.ft. (enter larger area if you need less ponding depth.)
7-2	Volume of treated runoff for area in Item 7-1	610.54	Cubic feet (Item 7-1 * 5 inches per hour * 1/12 * Item 4-2)
7-3	Subtract Item 7-2 from Item 3-3	180.65	Cubic feet (Amount of runoff to be stored in ponding area)
7-4	Divide Item 7-3 by Item 7-1	0.57	Feet (Depth of stored runoff in surface ponding area)
7-5	Convert Item 7-4 from ft. to inches	6.88	Inches (Depth of stored runoff in surface ponding area)
7-6	If the ponding depth in Item 7-5 meets target, stop here. If not, repeat Steps 7-1 through 7-5 until you obtain target depth.		
	(Note: Overflow outlet elevation should be set based on the calculated ponding depth.)		

8.0 Surface Area of Treatment Measure for DMA

8-1	Final surface area of treatment	315	Square feet (Either Item 5-2 or final amount in Item 7-1)

LID TREATMENT CONTROL MEASURE SUMMARY TABLE

DRAINAGE AREAS	DRAINAGE AREA SIZE (SQ. FT.)	PERVIOUS SURFACE (SQ. FT.)	TYPE OF PERVIOUS SURFACE	IMPERVIOUS SURFACE (SQ. FT.)	TYPE OF IMPERVIOUS SURFACE	WATER QUANTITY (FLOW AND/OR VOLUME GENERATED)		PROPOSED TREATMENT CONTROLS	CONFORMS TO SIZE STANDARD?
						REQUIRED (SF)	PROVIDED (SF)		
DMA 1	15,067	5,120	BIORETENTION BASIN LANDSCAPE	9,947	CONCRETE ASPHALT CONCRETE	286	320	BIORETENTION BASIN	YES
DMA 2	21,695	7,948	BIORETENTION BASIN LANDSCAPE	13,747	ASPHALT CONCRETE ROOF	466	462	BIORETENTION BASIN	YES
DMA 3	20,322	12,592	BIORETENTION BASIN LANDSCAPE	7,730	CONCRETE ASPHALT CONCRETE	270	450	BIORETENTION BASIN	YES
DMA 4	17,478	8,081	BIORETENTION BASIN LANDSCAPE	9,397	ASPHALT CONCRETE ROOF	306	315	BIORETENTION BASIN	YES
DMA 5	8,833	2,324	BIORETENTION BASIN LANDSCAPE	6,509	ASPHALT CONCRETE ROOF	202	339	BIORETENTION BASIN	YES
DMA 6	6,665	2,165	BIORETENTION BASIN LANDSCAPE	4,500	CONCRETE ROOF	141	549	BIORETENTION BASIN	YES
DMA 7	27,946	3,750	BIORETENTION BASIN LANDSCAPE	24,196	ASPHALT CONCRETE ROOF	737	755	BIORETENTION BASIN	YES
DMA 8	12,478	1,675	BIORETENTION BASIN LANDSCAPE	10,803	ASPHALT CONCRETE CONCRETE	329	366	BIORETENTION BASIN	YES
DMA 9	5,273	782	BIORETENTION BASIN LANDSCAPE	4,491	ASPHALT CONCRETE CONCRETE	137	172	BIORETENTION BASIN	YES

PACKAGE 1

GROUP 4 ARCHITECTURE RESEARCH + PLANNING, INC
211 LINDEN AVENUE
SO. SAN FRANCISCO
CA 94080 USA
650 871 0709

BKF ENGINEERS / SURVEYORS / PLANNERS
1730 N. FIRST ST.
SUITE 600
SAN JOSE, CA 95112
408-467-9100
408-467-9199 (FAX)

WASHINGTON PARK PLAYGROUND, SPORTS COURT, AND PICNIC AREA

850 BURLINGAME AVE
BURLINGAME
CA 94010

REGISTERED PROFESSIONAL ENGINEER — CIVIL — STATE OF CALIFORNIA

Project Arch.	----
CA REG.	----
PROJECT:	12421-04

ISSUE	DATE
SD SUBMITTAL	11/02/18
BID SET	03/25/19

SHEET TITLE AND NO.

STORM WATER CONTROL DETAILS

C7.0

EROSION CONTROL LEGEND

- PROPERTY LINE
- ADJACENT LOT LINE
- FIBER ROLL PER DETAIL 1, SHEET C9.1
- TEMPORARY SILT CONSTRUCTION FENCE
- INLET PROTECTION (TYPE A) PER DETAIL 2, SHEET C9.1
- INLET PROTECTION (TYPE B) PER DETAIL 3, SHEET C9.0
- STABILIZED CONSTRUCTION ENTRANCE/EXIT PER DETAIL 4, SHEET C9.1
- OUTLET TIRE WASH PER DETAIL 5, SHEET C9.1
- CONCRETE WASTE MANAGEMENT PER DETAIL 6, SHEET C9.1

PACKAGE 1
LIMIT OF WORK

7 C9.0 INSTALL SILT FENCE TYP.

INSTALL INLET PROTECTION TYP. 3 C9.0

EXISTING BASEBALL FIELD

PACKAGE 2
(N.A.P.)

6 C9.0 INSTALL CONCRETE WASHOUT.

CONTRACTOR TO DETERMINE FINAL CONSTRUCTION TIRE WASH LOCATION. 5 C9.0

CONTRACTOR TO DETERMINE FINAL CONSTRUCTION ENTRANCE LOCATION. 4 C9.0

BURLINGAME AVENUE

MYRTLE ROAD

ANITA ROAD

GRAPHIC SCALE
(IN FEET)
1 inch = 20 ft.

PACKAGE 1

GROUP 4 ARCHITECTURE RESEARCH + PLANNING, INC
211 LINDEN AVENUE
SO. SAN FRANCISCO
CA 94080 USA
650 871 0709

BKF ENGINEERS / SURVEYORS / PLANNERS
1730 N. FIRST ST.
SUITE 600
SAN JOSE, CA 95112
408-467-9100
408-467-9199 (FAX)

THE CITY OF BURLINGAME CALIFORNIA INCORPORATED 1908

WASHINGTON PARK PLAYGROUND, SPORTS COURT, AND PICNIC AREA

850 BURLINGAME AVE
BURLINGAME
CA 94010

REGISTERED PROFESSIONAL ENGINEER — CIVIL — STATE OF CALIFORNIA

Project Arch.	----
CA REG.	----
PROJECT:	12421-04

ISSUE	DATE
SD SUBMITTAL	11/02/18
BID SET	03/25/19

SHEET TITLE AND NO.

EROSION CONTROL PLAN

C8.0

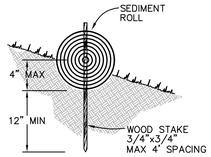

ENTRENCHMENT DETAIL IN SLOPE AREA

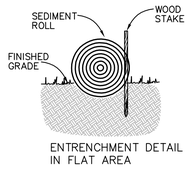

ENTRENCHMENT DETAIL IN FLAT AREA

NOTES:

1. USE REED & GRAHAM, INC. GEOSYNTHETICS STRAW WATTLE FIBER ROLL (COMES IN 9" X 25' ROLLS) OR APPROVED EQUIVALENT.
2. FIBER ROLL INSTALLATION REQUIRES THE PLACEMENT AND SECURE STAKING OF THE FIBER ROLL IN A TRENCH, 3" – 5" DEEP, DUG ON CONTOUR.
3. RUNOFF MUST NOT BE ALLOWED TO RUN UNDER OR AROUND FIBER ROLL. THE TOP OF THE STRUCTURE (PONDING HEIGHT) MUST BE WELL BELOW THE GROUND ELEVATION DOWNSLOPE TO PREVENT RUNOFF FROM BY–PASSING THE INLET.
4. EXCAVATION OF A BASIN ADJACENT TO THE DROP INLET OR A TEMPORARY DIKE ON THE DOWNSLOPE OF THE STRUCTURE MAY BE NECESSARY. IN PAVED AREAS, USE SAND BAGS TO SECURE FIBER ROLLS IN PLACE OF WOOD STAKE.

1 – FIBER ROLL

SCALE: NTS

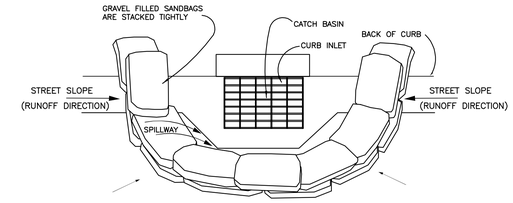

CURB INLET SEDIMENT BARRIER

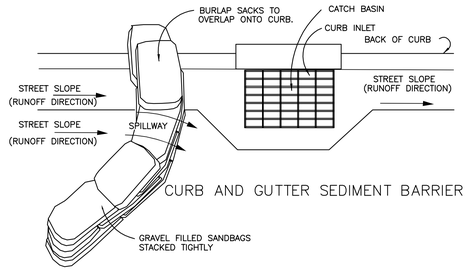

CURB AND GUTTER SEDIMENT BARRIER

NOTES:

1. PLACE CURB TYPE SEDIMENT BARRIERS ON GENTLY SLOPING STREETS, WHERE WATER CAN POND AND ALLOW SEDIMENT TO SEPARATE FROM RUNOFF.
2. SANDBAGS OF EITHER BURLAP OR WOVEN GEOTEXTILE FABRIC, ARE FILLED WITH GRAVEL, LAYERED AND PACKED TIGHTLY
3. LEAVE ONE SANDBAG GAP IN THE TOP ROW TO PROVIDE A SPILLWAY OVERFLOW. TOP OF SPILLWAY SHALL BE LOWER THAN TOP OF CURB.
4. INSPECT BARRIERS AND REMOVE SEDIMENT AFTER EACH STORM EVENT, SEDIMENT AND GRAVEL MUST BE REMOVED FROM THE TRAVELED WAY IMMEDIATELY.

2 – INLET PROTECTION (TYPE A)

SCALE: NTS

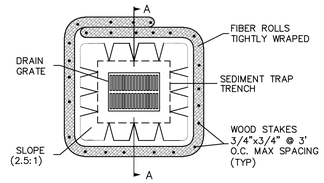

PLAN VIEW

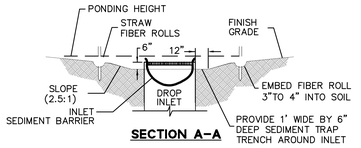

SECTION A–A

NOTE:

1. PLACE FIBER ROLLS AROUND THE INLET CONSISTENT WITH BASIN SEDIMENT BARRIER DETAIL ON THE SHEET. FIBER ROLLS ARE TUBES MADE FROM STRAW BOUND WITH PLASTIC NETTING. THEY ARE APPROXIMATELY 8" DIAMETER AND 20–30 FEET LONG.

3 – INLET PROTECTION (TYPE B)

SCALE: NTS

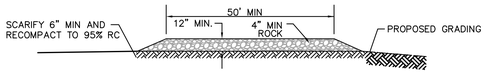

NOTES:

1. THE STABILIZED CONSTRUCTION ENTRANCE SHALL BE DESIGNED AND MAINTAINED IAW 2010 CFC, CHAPTER 5, 503.2.3.MVW 45,000 LBS.
2. SCARIFY THE TOP 6" OF SUBGRADE AND RECOMPACT TO AT LEAST 95% RELATIVE COMPACTION.
3. THE LOCATIONS SHOWN ARE FOR INFORMATION ONLY. CONSTRUCTION ENTRANCES SHALL BE MAINTAINED IN A CONDITION THAT WILL PREVENT TRACKING OR FLOWING OF SEDIMENT ONTO PUBLIC RIGHT–OF–WAYS. THIS MAY REQUIRE PERIODIC TOP DRESSING WITH ADDITIONAL ROCK AS CONDITIONS DEMAND, AND REPAIR AND/OR CLEANOUT OF ANY MEASURES USED TO TRAP SEDIMENT. ALL SEDIMENT SPILLED, DROPPED, WASHED OR TRACKED ONTO PUBLIC RIGHT–OF–WAYS SHALL BE REMOVED IMMEDIATELY.
4. WHEELS SHALL BE CLEANED TO REMOVE SEDIMENT PRIOR TO ENTRANCE ONTO PUBLIC RIGHT–OF–WAYS. WHEN WASHING IS REQUIRED, IT SHALL BE DONE ON AN AREA STABILIZED WITH CRUSHED ROCK THAT DRAINS INTO AN APPROVED SEDIMENT TRAP OR SEDIMENT BASIN. SEDIMENT SHALL BE PREVENTED FROM ENTERING THE STORM DRAIN, DITCH OR WATERCOURSE THROUGH USE OF INLET PROTECTION (E.G. GRAVELBAGS OR OTHER APPROVED METHODS).
5. THE MATERIAL FOR CONSTRUCTION OF THE PAD SHALL BE 4" MIN ROCK.
6. THE THICKNESS OF THE PAD SHALL NOT BE LESS THAN 12". THE WIDTH OF THE PAD SHALL NOT BE LESS THAN THE FULL WIDTH OF ALL POINTS OF INGRESS OR EGRESS, OR 25', WHICHEVER IS LESS.
7. THE LENGTH OF THE PAD SHALL NOT BE LESS THAN 50'.

4 – STABILIZED CONSTRUCTION ENTRANCE/EXIT

SCALE: NTS

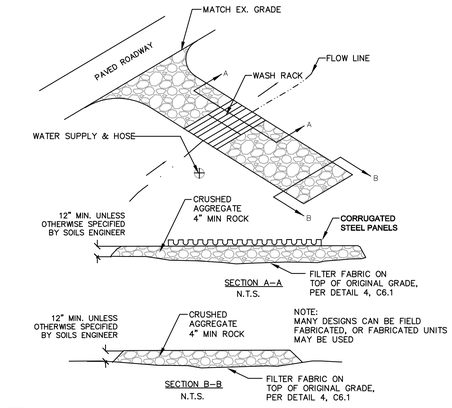

5 – OUTLET TIRE WASH

SCALE: NTS

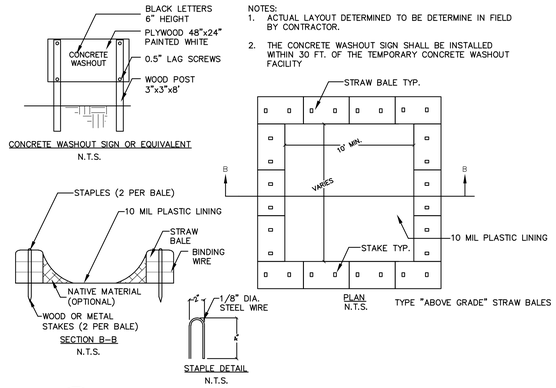

6 – CONCRETE WASTE MANAGEMENT

SCALE: NTS

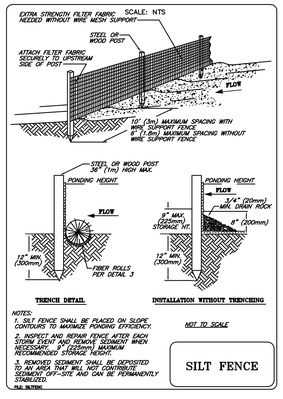

7 – SILT FENCE

SCALE: NTS

PACKAGE 1

GROUP 4 ARCHITECTURE RESEARCH + PLANNING, INC
211 LINDEN AVENUE
SO. SAN FRANCISCO
CA 94080 USA
650 871 0709

BKF ENGINEERS / SURVEYORS / PLANNERS
1730 N. FIRST ST.
SUITE 600
SAN JOSE, CA 95112
408–467–9100
408–467–9199 (FAX)

WASHINGTON PARK PLAYGROUND, SPORTS COURT, AND PICNIC AREA

850 BURLINGAME AVE
BURLINGAME
CA 94010

REGISTERED PROFESSIONAL ENGINEER — CIVIL — STATE OF CALIFORNIA

Project Arch.	----
CA REG.	----
PROJECT:	12421–04

ISSUE	DATE
SD SUBMITTAL	11/02/18
BID SET	03/25/19

SHEET TITLE AND NO.

EROSION CONTROL DETAILS

C9.0

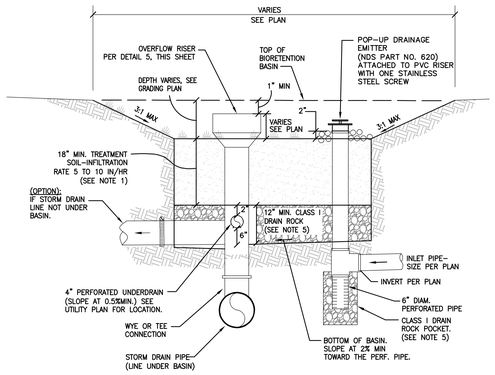

TRANSVERSE SECTION - CASE 2 (BUBBLER ASS'Y WITHIN BIORETENTION)

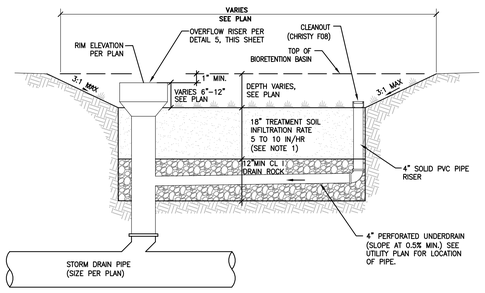

LONGITUDINAL SECTION

N.T.S.

NOTE:

1. FOR TREATMENT SOIL SPECIFICATION, SEE APPENDIX C IN SCVURPPP C3 STORMWATER HANDBOOK DATED APRIL 2016.
2. BACKFILL BIORETENTION ONLY WITH PERMEABLE PLANTING MATERIAL AND DRAIN ROCK AS SPECIFIED IN THIS DETAIL. ABSOLUTELY NO NATIVE MATERIAL SHALL BE USED FOR BACKFILL. CONTRACTOR MUST COORDINATE WITH CIVIL ENGINEER PRIOR TO CONSTRUCTION.
3. CONTACT THE CITY'S URBAN RUNOFF COORDINATOR FOR INSPECTION DURING INSTALLATION OF BIOTREATMENT SOIL, OF THE TREE POD SYSTEM, AND FINAL LANDSCAPING. RESULT FROM A PERCOLATION RATE SHALL BE GREATER THAN 5.0 IN/HR AND LESS THAN 10.0 IN/HR.
4. A MINIMUM 2-FOOT LEVEL CLEARANCE (MAX 2%) SHALL BE PROVIDE BETWEEN THE TOP OF BASIN AND WALKWAYS/PUBLIC SIDEWALKS.
5. DRAIN ROCK TO BE CLASS 1 PERMEABLE MATERIAL PER CALTRANS STANDARD SPECIFICATIONS, SECTION 68-2.02F.
6. PERFORATED PIPE SHALL BE SOLVENT WELD PVC SDR 35 (OR APPROVED EQUAL) WITH PERFORATIONS FACED DOWN. LOCATION OF THE PIPE VARIES, SEE PLAN.
7. FOR ANY HORIZONTAL LINER PENETRATIONS, RADIAL-CUT THE LINER FOR PIPE. MASTIC AND SEAL WITH PIPE CLAMP TO INSURE WATER-TIGHT SEAL.

NOT TO SCALE

(1) BIORETENTION BASIN

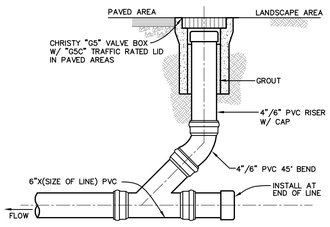

NOTES:

1. ALL PVC PIPE TO BE SDR 35.
2. LIDS SHALL BE MARKED "SD" FOR STORM DRAIN AND "SS" FOR SANITARY SEWER.
3. INSTALL H20 TRAFFIC LOADING FRAME & COVER WHEN CLEAN-OUTS ARE SUBJECT TO VEHICULAR TRAFFIC

NOT TO SCALE

(2) STORM DRAIN/SANITARY SEWER CLEAN OUT

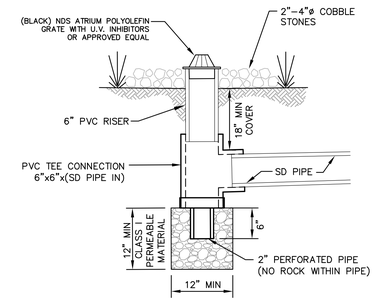

CASE 1

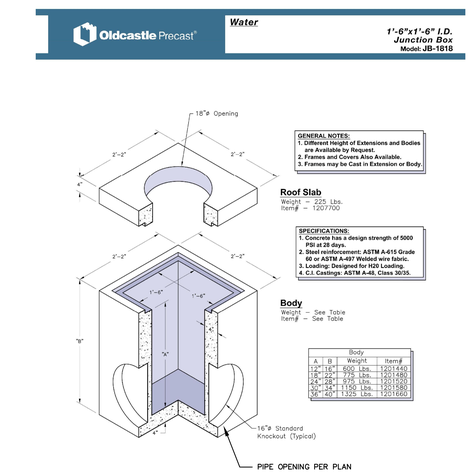

NOT TO SCALE

(3) STORM DRAIN JUNCTION BOX / DROP INLET

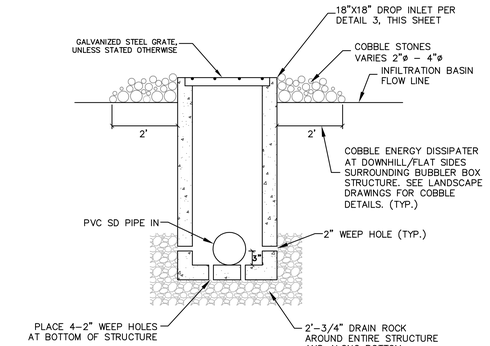

CASE 2

NOT TO SCALE

(4) STORM DRAIN BUBBLER BOX

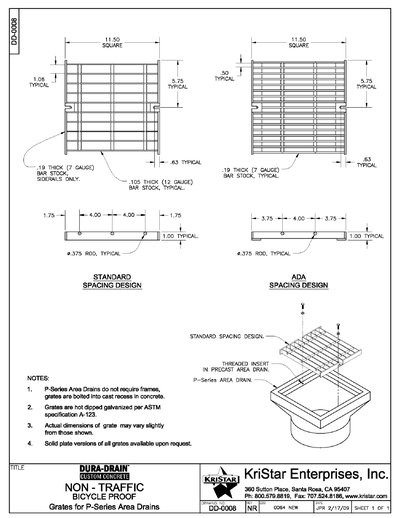

NOT TO SCALE

(5) OVERFLOW DRAIN RISER AT BIORETENTION BASIN

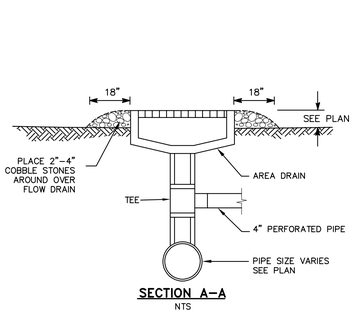

SECTION A-A

NTS

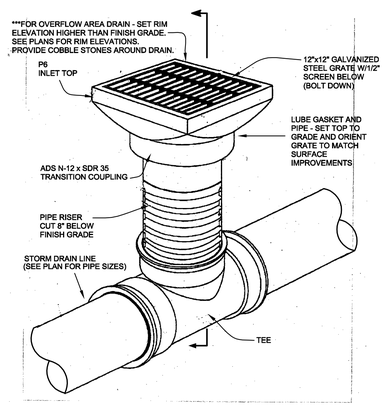

PACKAGE 1

GROUP 4 ARCHITECTURE RESEARCH + PLANNING, INC
211 LINDEN AVENUE
SO. SAN FRANCISCO
CA 94080 USA
650 871 0709

BkF ENGINEERS / SURVEYORS / PLANNERS
1730 N. FIRST ST.
SUITE 600
SAN JOSE, CA 95112
408-467-9100
408-467-9199 (FAX)

WASHINGTON PARK PLAYGROUND, SPORTS COURT, AND PICNIC AREA

850 BURLINGAME AVE
BURLINGAME
CA 94010

REGISTERED PROFESSIONAL ENGINEER
PAUL J. RICHTER
CIVIL
STATE OF CALIFORNIA

Project Arch.	----
CA REG.	----
PROJECT:	12421-04

ISSUE	DATE
SD SUBMITTAL	11/02/18
BID SET	03/25/19

SHEET TITLE AND NO.

CONSTRUCTION DETAILS

C10.0

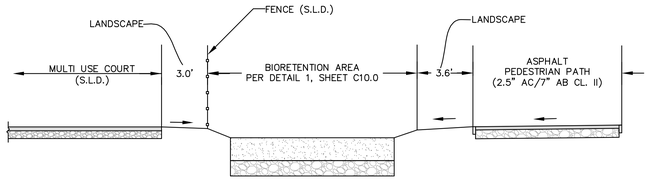

SECTION A
SCALE: 1"=4'

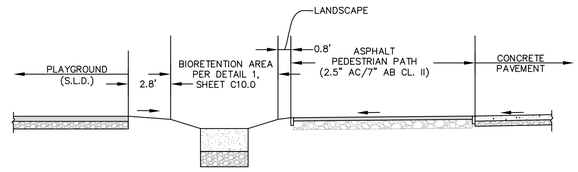

SECTION B
SCALE: 1"=4'

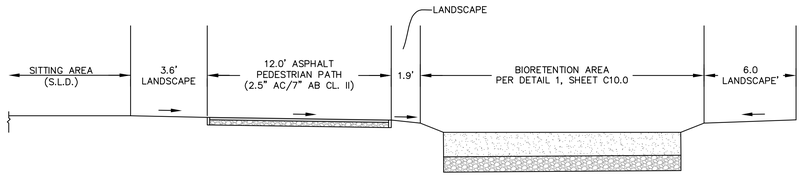

SECTION C
SCALE: 1"=4'

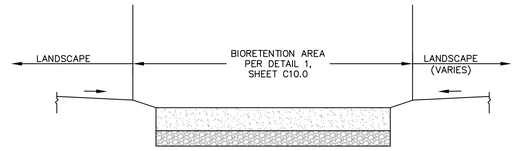

SECTION D
SCALE: 1"=4'

PACKAGE 1

GROUP 4 ARCHITECTURE RESEARCH + PLANNING, INC
211 LINDEN AVENUE
SO. SAN FRANCISCO
CA 94080 USA
650 871 0709

BKF ENGINEERS / SURVEYORS / PLANNERS
1730 N. FIRST ST.
SUITE 600
SAN JOSE, CA 95112
408-467-9100
408-467-9199 (FAX)

WASHINGTON PARK PLAYGROUND, SPORTS COURT, AND PICNIC AREA

850 BURLINGAME AVE
BURLINGAME
CA 94010

REGISTERED PROFESSIONAL ENGINEER
CIVIL
STATE OF CALIFORNIA

Project Arch.	----
CA REG.	----
PROJECT:	12421-04

ISSUE	DATE
SD SUBMITTAL	11/02/18
BID SET	03/25/19

SHEET TITLE AND NO.

CROSS SECTIONS

C11.0

SAN MATEO COUNTYWIDE
Water Pollution Prevention Program
Clean Water. Healthy Community.

Construction Best Management Practices (BMPs)

Construction projects are required to implement the stormwater best management practices (BMP) on this page, as they apply to your project, all year long.

Materials & Waste Management

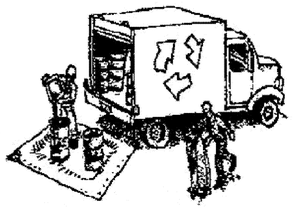

Non-Hazardous Materials

- ❑ Berm and cover stockpiles of sand, dirt or other construction material with tarps when rain is forecast or if not actively being used within 14 days.
- ❑ Use (but don't overuse) reclaimed water for dust control.

Hazardous Materials

- ❑ Label all hazardous materials and hazardous wastes (such as pesticides, paints, thinners, solvents, fuel, oil, and antifreeze) in accordance with city, county, state and federal regulations.
- ❑ Store hazardous materials and wastes in water tight containers, store in appropriate secondary containment, and cover them at the end of every work day or during wet weather or when rain is forecast.
- ❑ Follow manufacturer's application instructions for hazardous materials and be careful not to use more than necessary. Do not apply chemicals outdoors when rain is forecast within 24 hours.
- ❑ Arrange for appropriate disposal of all hazardous wastes.

Waste Management

- ❑ Cover waste disposal containers securely with tarps at the end of every work day and during wet weather.
- ❑ Check waste disposal containers frequently for leaks and to make sure they are not overfilled. Never hose down a dumpster on the construction site.
- ❑ Clean or replace portable toilets, and inspect them frequently for leaks and spills.
- ❑ Dispose of all wastes and debris properly. Recycle materials and wastes that can be recycled (such as asphalt, concrete, aggregate base materials, wood, gyp board, pipe, etc.)
- ❑ Dispose of liquid residues from paints, thinners, solvents, glues, and cleaning fluids as hazardous waste.

Construction Entrances and Perimeter

- ❑ Establish and maintain effective perimeter controls and stabilize all construction entrances and exits to sufficiently control erosion and sediment discharges from site and tracking off site.
- ❑ Sweep or vacuum any street tracking immediately and secure sediment source to prevent further tracking. Never hose down streets to clean up tracking.

Equipment Management & Spill Control

Maintenance and Parking

- ❑ Designate an area, fitted with appropriate BMPs, for vehicle and equipment parking and storage.
- ❑ Perform major maintenance, repair jobs, and vehicle and equipment washing off site.
- ❑ If refueling or vehicle maintenance must be done onsite, work in a bermed area away from storm drains and over a drip pan or drop cloths big enough to collect fluids. Recycle or dispose of fluids as hazardous waste.
- ❑ If vehicle or equipment cleaning must be done onsite, clean with water only in a bermed area that will not allow rinse water to run into gutters, streets, storm drains, or surface waters.
- ❑ Do not clean vehicle or equipment onsite using soaps, solvents, degreasers, or steam cleaning equipment.

Spill Prevention and Control

- ❑ Keep spill cleanup materials (e.g., rags, absorbents and cat litter) available at the construction site at all times.
- ❑ Inspect vehicles and equipment frequently for and repair leaks promptly. Use drip pans to catch leaks until repairs are made.
- ❑ Clean up spills or leaks immediately and dispose of cleanup materials properly.
- ❑ Do not hose down surfaces where fluids have spilled. Use dry cleanup methods (absorbent materials, cat litter, and/or rags).
- ❑ Sweep up spilled dry materials immediately. Do not try to wash them away with water, or bury them.
- ❑ Clean up spills on dirt areas by digging up and properly disposing of contaminated soil.
- ❑ Report significant spills immediately. You are required by law to report all significant releases of hazardous materials, including oil. To report a spill: 1) Dial 911 or your local emergency response number, 2) Call the Governor's Office of Emergency Services Warning Center, (800) 852-7550 (24 hours).

Earthmoving

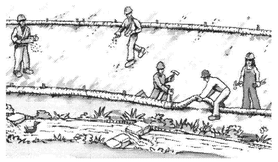

- ❑ Schedule grading and excavation work during dry weather.
- ❑ Stabilize all denuded areas, install and maintain temporary erosion controls (such as erosion control fabric or bonded fiber matrix) until vegetation is established.
- ❑ Remove existing vegetation only when absolutely necessary, and seed or plant vegetation for erosion control on slopes or where construction is not immediately planned.
- ❑ Prevent sediment from migrating offsite and protect storm drain inlets, gutters, ditches, and drainage courses by installing and maintaining appropriate BMPs, such as fiber rolls, silt fences, sediment basins, gravel bags, berms, etc.
- ❑ Keep excavated soil on site and transfer it to dump trucks on site, not in the streets.

Contaminated Soils

- ❑ If any of the following conditions are observed, test for contamination and contact the Regional Water Quality Control Board:
  - Unusual soil conditions, discoloration, or odor.
  - Abandoned underground tanks.
  - Abandoned wells
  - Buried barrels, debris, or trash.

Paving/Asphalt Work

- ❑ Avoid paving and seal coating in wet weather or when rain is forecast, to prevent materials that have not cured from contacting stormwater runoff.
- ❑ Cover storm drain inlets and manholes when applying seal coat, tack coat, slurry seal, fog seal, etc.
- ❑ Collect and recycle or appropriately dispose of excess abrasive gravel or sand. Do NOT sweep or wash it into gutters.
- ❑ Do not use water to wash down fresh asphalt concrete pavement.

Sawcutting & Asphalt/Concrete Removal

- ❑ Protect nearby storm drain inlets when saw cutting. Use filter fabric, catch basin inlet filters, or gravel bags to keep slurry out of the storm drain system.
- ❑ Shovel, abosorb, or vacuum saw-cut slurry and dispose of all waste as soon as you are finished in one location or at the end of each work day (whichever is sooner!).
- ❑ If sawcut slurry enters a catch basin, clean it up immediately.

Concrete, Grout & Mortar Application

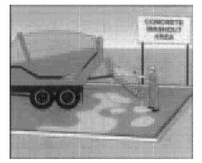

- ❑ Store concrete, grout, and mortar away from storm drains or waterways, and on pallets under cover to protect them from rain, runoff, and wind.
- ❑ Wash out concrete equipment/trucks offsite or in a designated washout area, where the water will flow into a temporary waste pit, and in a manner that will prevent leaching into the underlying soil or onto surrounding areas. Let concrete harden and dispose of as garbage.
- ❑ When washing exposed aggregate, prevent washwater from entering storm drains. Block any inlets and vacuum gutters, hose washwater onto dirt areas, or drain onto a bermed surface to be pumped and disposed of properly.

Landscaping

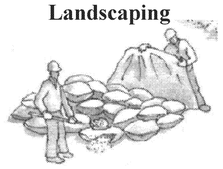

- ❑ Protect stockpiled landscaping materials from wind and rain by storing them under tarps all year-round.
- ❑ Stack bagged material on pallets and under cover.
- ❑ Discontinue application of any erodible landscape material within 2 days before a forecast rain event or during wet weather.

Painting & Paint Removal

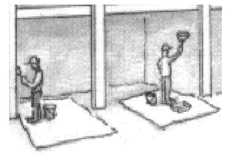

Painting Cleanup and Removal

- ❑ Never clean brushes or rinse paint containers into a street, gutter, storm drain, or stream.
- ❑ For water-based paints, paint out brushes to the extent possible, and rinse into a drain that goes to the sanitary sewer. Never pour paint down a storm drain.
- ❑ For oil-based paints, paint out brushes to the extent possible and clean with thinner or solvent in a proper container. Filter and reuse thinners and solvents. Dispose of excess liquids as hazardous waste.
- ❑ Paint chips and dust from non-hazardous dry stripping and sand blasting may be swept up or collected in plastic drop cloths and disposed of as trash.
- ❑ Chemical paint stripping residue and chips and dust from marine paints or paints containing lead, mercury, or tributyltin must be disposed of as hazardous waste. Lead based paint removal requires a state-certified contractor.

Dewatering

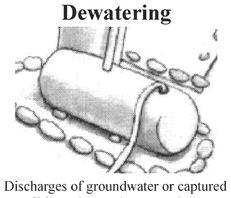

- ❑ Discharges of groundwater or captured runoff from dewatering operations must be properly managed and disposed. When possible send dewatering discharge to landscaped area or sanitary sewer. If discharging to the sanitary sewer call your local wastewater treatment plant.
- ❑ Divert run-on water from offsite away from all disturbed areas.
- ❑ When dewatering, notify and obtain approval from the local municipality before discharging water to a street gutter or storm drain. Filtration or diversion through a basin, tank, or sediment trap may be required.
- ❑ In areas of known or suspected contamination, call your local agency to determine whether the ground water must be tested. Pumped groundwater may need to be collected and hauled off-site for treatment and proper disposal.

Storm drain polluters may be liable for fines of up to $10,000 per day!

PACKAGE 1

GROUP 4 ARCHITECTURE RESEARCH + PLANNING, INC
211 LINDEN AVENUE
SO. SAN FRANCISCO
CA 94080 USA
650 871 0709

BKF ENGINEERS / SURVEYORS / PLANNERS
1730 N. FIRST ST.
SUITE 600
SAN JOSE, CA 95112
408-467-9100
408-467-9199 (FAX)

THE CITY OF BURLINGAME CALIFORNIA INCORPORATED 1908

WASHINGTON PARK PLAYGROUND, SPORTS COURT, AND PICNIC AREA

850 BURLINGAME AVE BURLINGAME CA 94010

REGISTERED PROFESSIONAL ENGINEER CIVIL STATE OF CALIFORNIA

Project Arch.	----
CA REG.	----
PROJECT:	12421-04

ISSUE	DATE
SD SUBMITTAL	11/02/18
BID SET	03/25/19

SHEET TITLE AND NO.

BEST MANAGEMENT PRACTICES

C12.0

GENERAL NOTES:

1. THESE DRAWINGS AND SPECIFICATIONS DESCRIBE THE QUALITY AND CHARACTER OF THE MATERIALS, SHAPE, CONFIGURATION AND DESIGN INTENT OF THE COMPLETED, INSTALLED WORK. THE CONTRACTOR IS RESPONSIBLE FOR PROVIDING COMPLETE AND OPERATIONAL SYSTEMS AND INSTALLATIONS OF THE DESCRIBED DESIGN INTENT, INCLUDING ALL MISCELLANEOUS ITEMS OF WORK, MATERIALS, EQUIPMENT, ETC., NECESSARY TO COMPLETE THE INSTALLATION WHETHER OR NOT MENTIONED IN THE SPECIFICATIONS OR SHOWN ON THE DRAWINGS. ALL MATERIALS SHALL BE FURNISHED AND PROPERLY INSTALLED BY THE CONTRACTOR UNLESS OTHERWISE NOTED.

2. THE INSTALLED WORK SHALL CONFORM TO THE REQUIREMENTS OF THE GOVERNING BUILDING AUTHORITY, ALL SPECIAL REQUIREMENTS AND CONDITIONS OF THE BUILDING PERMIT, AND ALL APPLICABLE CODES, LAWS, STANDARDS, ETC.

3. THE CONTRACTOR SHALL EXAMINE THE DRAWINGS AND SPECIFICATIONS AND CLEARLY UNDERSTAND THE EXISTING CONDITIONS UNDER WHICH THE WORK IS TO BE PERFORMED PRIOR TO BIDDING. THE CONTRACTOR SHALL BE FAMILIAR WITH THE PROJECT SITE, FIELD INVESTIGATE, VERIFY AND BE RESPONSIBLE FOR ALL CONDITIONS, ELEVATIONS AND DIMENSIONS OF THE PROJECT, AS SHOWN ON OR REFERENCED ON THE DRAWINGS. THE CONTRACTOR SHALL NOTIFY THE OWNER'S REPRESENTATIVE ABOUT ANY CONDITION REQUIRING MODIFICATION OR CLARIFICATION PRIOR TO BIDDING. ENTERING INTO AN AGREEMENT WITH THE OWNER INDICATES THAT THE CONTRACTOR HAS VISITED THE SITE, FAMILIAR WITH THE EXISTING CONDITIONS AND FULLY UNDERSTANDS THE REQUIREMENTS OF THE CONTRACT DOCUMENTS. NO ALLOWANCES OF ANY KIND WILL BE MADE FOR ANY EXTRA COST DUE TO THE CONTRACTOR'S FAILURE TO INFORM THE OWNER OF DISCREPANCIES IN TIME TO ISSUE CORRECTIVE ADDENDA PRIOR TO BIDDING.

4. ALL GENERAL NOTES, DIMENSIONS, AND DETAILS SHALL BE CONSIDERED TYPICAL AND APPLY TO SIMILAR CONDITIONS UNLESS OTHERWISE NOTED. SPECIFIC NOTES, DETAILS AND SPECIFICATIONS SHALL TAKE PRECEDENCE OVER GENERAL NOTES AND TYPICAL DETAILS.

5. THE CONTRACTOR IS RESPONSIBLE FOR THE COORDINATION OF ALL WORK BETWEEN TRADES, SUBCONTRACTORS, MANUFACTURERS, FABRICATORS, AND ALL OTHER CONTRACTED FOR THE COMPLETION OF THE WORK, INCLUDING THOSE UNDER SEPARATE CONTRACTS FOR CONCURRENT PROJECTS.

6. THE CONTRACTOR IS RESPONSIBLE FOR ALL TESTING, INSPECTIONS AND REPORTING AS OUTLINED IN THE CONTRACT DOCUMENT AND AS REQUIRED BY THE PERMITTING AUTHORITIES TO COMPLETE THE WORK.

7. ALL WORK SHALL BE IN ACCORDANCE WITH THE RECOMMENDATIONS SPECIFIED IN THE GEOTECHINICAL INVESTIGATION REPORT PREPARED BY MURRAY ENGINEER'S INC, DATED JULY, 2018. THE RECOMMENDATIONS OF THE REPORT SHALL SUPERSEDE THE INFORMATION FOUND WITHIN THESE CONTRACT DOCUMENTS (DRAWINGS AND SPECIFICATIONS).

8. CONTRACTOR SHALL NOTIFY UNDERGROUND SERVICE ALERT (USA 800-642-2444) TWO WORKING DAYS MINIMUM PRIOR TO ANY EXCAVATION.

9. PROVIDE ADEQUATE PROTECTION FOR ALL PROPOSED AND EXISTING UTILITIES DURING THE CONSTRUCTION OF THIS PROJECT.

10. ALL EXISTING UTILITY STRUCTURES (SHOWN OR NOT SHOWN ON THE DRAWINGS) WITHIN THE AREA OF WORK SHALL BE ADJUSTED OR RECONSTRUCTED TO THE FINISH GRADES SHOWN AND SPECIFIED.

11. UTILITY CONNECTIONS AND DISCONNECTIONS NECESSARY TO COMPLETE THE WORK SHALL BE PERFORMED IN SUCH A MANNER AS TO MINIMIZE UTILITY SERVICE INTERRUPTIONS. CONTRACTOR SHALL COORDINATE ALL "DOWN TIME" WITH THE OWNER'S REPRESENTATIVE AND THE APPROPRIATE UTILITY AND/OR AGENCY.

12. REFER TO CIVIL DRAWINGS FOR INFORMATION AND LOCATION OF ALL EXISTING AND PROPOSED UTILITIES.

13. THE CONTRACTOR SHALL PROTECT EXISTING FACILITIES, TREES, LANDSCAPE AND OTHER ITEMS TO REMAIN FROM DAMAGE. ANY DAMAGE CAUSED BY THE CONTRACTOR SHALL BE REPAIRED OR REPLACED AT NO ADDITIONAL COST TO THE OWNER. THE CONTRACTOR SHALL PROVIDE BARRICADES, SIGNS, LIGHTS, ETC. FOR THE PROTECTION OF PUBLIC, PERSONNEL, PROPERTY, AND MATERIAL AND TO PREVENT UNCONTROLLED ACCESS TO THE SITE AT ALL TIMES. THE CONTRACTOR SHALL ASSUME SOLE AND COMPLETE RESPONSIBILITY FOR JOB SITE CONDITIONS DURING THE COURSE OF CONSTRUCTION OF THE PROJECT, INCLUDING SAFETY OF ALL PERSONS AND PROPERTY, AND NOT LIMITED TO NORMAL WORKING HOURS.

14. THE CONTRACTOR SHALL PROVIDE ACCESSIBLE EGRESS AND INGRESS TO ON-SITE FACILITIES THAT ARE TO REMAIN OPERATIONAL DURING CONSTRUCTION.

15. ANY PERMANENT MONUMENTS OR POINTS DAMAGED OR DESTROYED BY CONSTRUCTION ACITIVITIES SHALL BE REPLACED BY A LICENSED ENGINEER OR LAND SURVEYOR AT THE CONTRACTOR'S EXPENSE.

16. THE CONTRACTOR SHALL EMPLOY ALL MEANS NECESSARY TO CONTROL AIRBORNE PARTICULATE (DUST) AT AND NEAR THE CONSTRUCTION SITE OF WORK AND ALONG APPROACH ROUTES TO THE CONSTRUCTION SITE AND IN COMPLIANCE WITH LOCAL AIR QUALITY STANDARDS.

17. CONTRACTOR SHALL MAINTAIN "GOOD HOUSEKEEPING" PRACTICES AT THE JOB SITE. EXCESS BUILDING MATERIALS AND DEBRIS SHALL BE REMOVED PROMPTLY FROM THE JOB SITE AND DISPOSED OF AT AN APPROVED DUMPSITE. THE JOB SITE SHALL BE LEFT "BROOM CLEAN" AT THE END OF EACH WORKDAY. BEFORE ACCEPTANCE BY THE OWNER'S REPRESENTATIVE, THE COMPLETED CONSTRUCTION SHALL BE CLEARED, ANY APPLICABLE LABELS REMOVED, AND ALL OTHER TOUCHUP WORK COMPLETED. ALL FINISH MATERIALS SHALL BE PROTECTED AT ALL TIMES AGAINST SUBSEQUENT DAMAGE UNTIL FINAL ACCEPTANCE BY THE OWNER'S REPRESENTATIVE.

18. THE CONTRACTOR SHALL CONTACT THE OWNER'S REPRESENTATIVE FOR DESIGNATION OF THE EQUIPMENT AND MATERIAL STORAGE AND STAGING AREAS AT THE JOB SITE.

19. THE CONTRACTOR SHALL PREPARE A TRAFFIC CONTROL PLAN FOR REVIEW AND APPROVAL BY THE APPROPRIATE AGENCY PRIOR TO ANY WORK REQUIRING TRAFFIC CONTROL. THE CONTRACTOR SHALL BE PROVIDE TRAFFIC CONTROLS IN ACCORDANCE WITH CALTRANS "MANUAL OF TRAFFIC CONTROLS FOR CONSTRUCTION AND MAINTENANCE WORK ZONES" (CURRENT EDITION) AND ANY ADDITIONAL CITY, COUNTY, DISTRICT OR OTHER AGENCY REQUIREMENTS. FAILURE TO COMPLY MAY RESULT IN IMMEDIATE STOPPAGE OF WORK UNTIL THE PROPER TRAFFIC CONTROL IS IN PLACE.

20. THE CONTRACTOR IS RESPONSIBLE FOR CONFORMING TO ALL IMPROVEMENTS TO THE ADJACENT EXISTING CONDITIONS WITH SMOOTH TRANSITIONS TO AVOID ANY ABRUPT OR APPARENT CHANGES IN GRADES, CROSS SLOPE, HAZARDOUS CONDITIONS, ETC.

21. THE CONTRACTOR SHALL IMMEDIATELY NOTIFY THE OWNER'S REPRESENTATIVE OF ANY REVISIONS OR ADDITIONAL WORK REQUIRED AS A RESULT OF FIELD CONDITIONS OR LOCAL GOVERNING AUTHORITIES. ALL REVISIONS SHALL BE IN WRITTEN CHANGE ORDER FORM AND APPROVED AND AUTHORIZED BY THE OWNER'S REPRESENTATIVE BEFORE PROCEEDING WITH THE WORK. WORK PERFORMED WITHOUT WRITTEN AUTHORIZATION SHALL BE THE FULL RESPONSIBILITY OF THE CONTRACTOR AND AT NO ADDITIONAL COST TO THE OWNER.

LANDSCAPE SHEET LIST:

SHEET NO.	TITLE
L0.0	LANDSCAPE NOTES & LEGEND
L0.1	KEY PLAN
L1.0	TREE PROTECTION & REMOVAL PLAN
L1.1	TREE PROTECTION & REMOVAL PLAN
L2.0	ACCESSIBILITY PLAN
L3.1	CONSTRUCTION PLAN
L3.2	CONSTRUCTION PLAN
L4.0	CONSTRUCTION DETAILS
L4.1	CONSTRUCTION DETAILS
L4.2	CONSTRUCTION DETAILS
L5.1	LAYOUT PLAN
L5.2	LAYOUT PLAN
L6.0	IRRIGATION NOTES & LEGEND
L6.1	IRRIGATION PLAN
L6.2	IRRIGATION PLAN
L6.3	IRRIGATION DETAILS
L6.4	IRRIGATION DETAILS
L6.5	IRRIGATION DETAILS
L6.6	IRRIGATION DETAILS
L6.7	IRRIGATION WATER USE CALCULATIONS
L7.0	PLANTING NOTES & LEGEND
L7.1	TREE PLAN
L7.2	PLANTING PLAN
L7.3	PLANTING PLAN
L7.4	PLANTING DETAILS

LANDSCAPE LEGEND:

SYMBOL	DESCRIPTION		
ARCH.	ARCHITECT	MIN.	MINIMUM
BLDG.	BUILDING	(N)	NEW
B.O.C.	BACK OF CURB	N.I.C.	NOT IN CONTRACT
BW	BOTTOM OF WALL	OC	ON CENTER
℄	CENTER LINE	PA	PLANTING AREA
CONC.	CONCRETE	R	RADIUS
D.G.	DECOMPOSED GRANITE	S.C.D.	SEE CIVIL DRAWINGS
DWGS.	DRAWINGS	S.E.D.	SEE ELECTRICAL DRAWINGS
(E)	EXISTING	S.S.D.	SEE STRUCTURAL DRAWINGS
E.J	EXPANSION JOINT	SIM.	SIMILAR
ELECT.	ELECTRICAL	SP.	SPACING
EQ	EQUAL	STA	STATION
F.O.B.	FACE OF BUILDING	T.O.F.	TOP OF FOOTING
F.O.C.	FACE OF CURB	TP	TOP OF PAVING
FTP	FLOW THROUGH PLANTER	TW	TOP OF WALL
GALV.	GALVANIZED	TYP.	TYPICAL
MANUF.	MANUFACTURER	V.I.F.	VERIFY IN FIELD
MAX.	MAXIMUM		

GROUP 4
ARCHITECTURE
RESEARCH +
PLANNING, INC
211 LINDEN AVENUE
SO. SAN FRANCISCO
CA 94080 USA
650 871 0709

rhaa
LANDSCAPE ARCHITECTURE + PLANNING
583 Geary Street, Suite 602, San Francisco, CA 94102
T 415 861 7900 F 415 861 7908 www.rhaa.com

THE CITY OF BURLINGAME CALIFORNIA INCORPORATED 1908

WASHINGTON PARK PLAYGROUND, SPORTS COURT, AND PICNIC AREA

850 BURLINGAME AVE
BURLINGAME
CA 94010

LICENSED LANDSCAPE ARCHITECT
Signature
04/30/19
Renewal Date
03/25/19
Date
STATE OF CALIFORNIA

Project Arch.	----
CA REG.	----
PROJECT:	12421-04

ISSUE	DATE
SD SUBMITTAL	11/02/18
BID SET	03/25/19

SHEET TITLE AND NO.
LANDSCAPE NOTES & LEGEND

L0.0

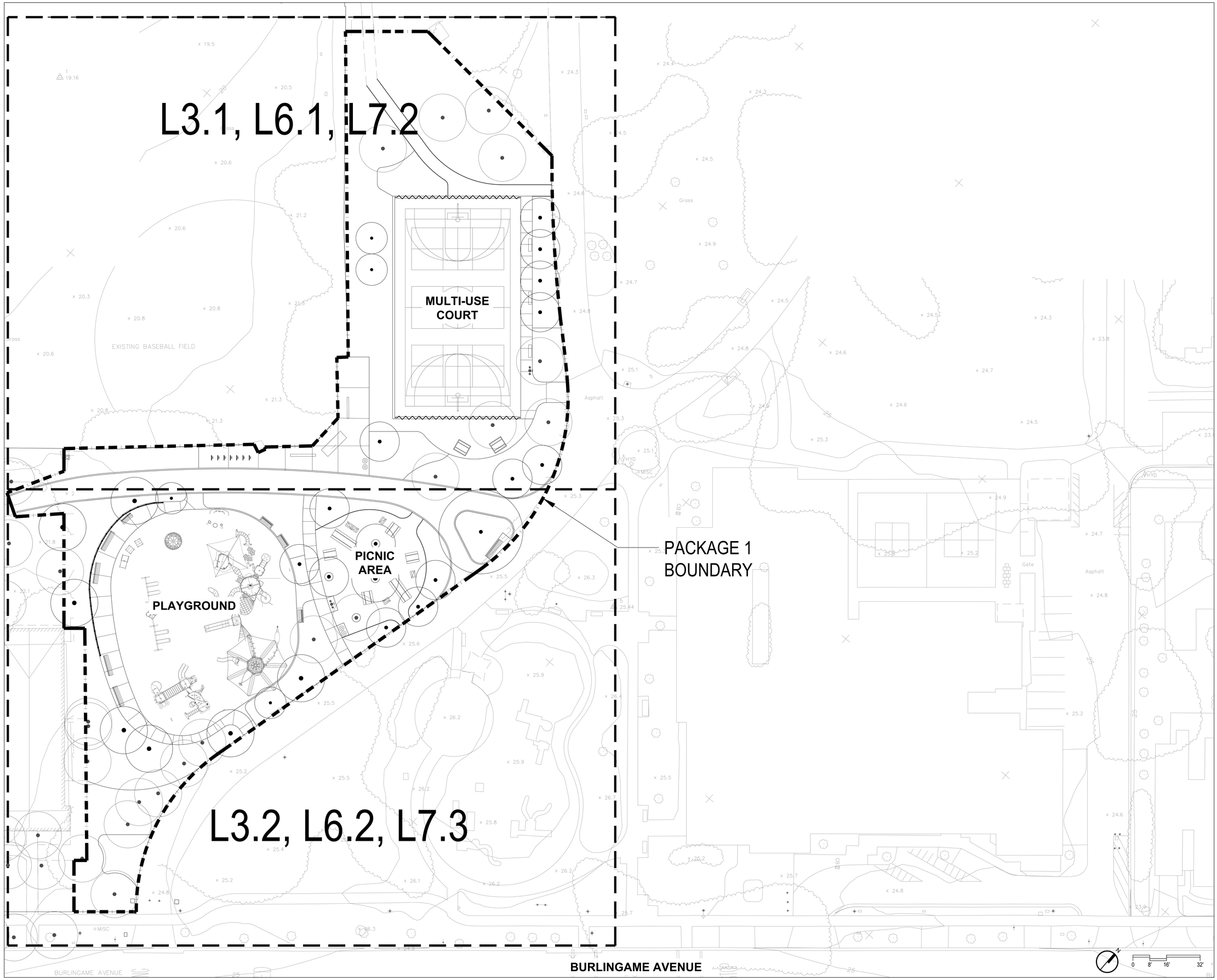

GROUP 4
ARCHITECTURE RESEARCH + PLANNING, INC
211 LINDEN AVENUE
SO. SAN FRANCISCO
CA 94080 USA
650·871·0709

rhaa
LANDSCAPE ARCHITECTURE + PLANNING
323 Geary Street, Suite 602, San Francisco, CA 94102
T 415 861 7900 F 415 861 7908 www.rhaa.com

THE CITY OF BURLINGAME CALIFORNIA INCORPORATED 1908

WASHINGTON PARK PLAYGROUND, SPORTS COURT, AND PICNIC AREA

850 BURLINGAME AVE
BURLINGAME
CA 94010

LICENSED LANDSCAPE ARCHITECT
Lincoln Lizzie
Signature
04/30/19
Renewal Date
03/25/19
Date
STATE OF CALIFORNIA

Project Arch.	----
CA REG.	----
PROJECT:	12421-04

ISSUE	DATE
SD SUBMITTAL	11/02/18
BID SET	03/25/19

SHEET TITLE AND NO.
KEY PLAN

L0.1

Tree No.	Common Name	Scientific Name	Remove	Preserve	Relocate	RHAA Comments	Trunk Diameter (in.)	Protected Tree?
1	River red gum	Eucalyptus camaldulensis		1		Preserve. City Arborist to evaluate their long term viability.	2	No
2	River red gum	Eucalyptus camaldulensis		1		Preserve. City Arborist to evaluate their long term viability.	30	Yes
3	River red gum	Eucalyptus camaldulensis		1		Preserve. City Arborist to evaluate their long term viability.	38	Yes
50	Trident maple	Acer buergeranum		1		Preserve.	9	No
51	Tarata	Pittosporum tenufolium		1		Preserve.	10,9,9,6	Yes
52	Trident maple	Acer buergeranum		1		Preserve. Outside project boundary.	1	No
53	Trident maple	Acer buergeranum		1		Preserve. Outside project boundary.	1	No
54	Japanese maple	Acer palmatum		1		Preserve. Outside project boundary.	2,1,1,1	No
55	Japanese maple	Acer palmatum		1		Preserve. Outside project boundary.	1,1,1	No
56	English laurel	Prunus laurocerasus		1		Preserve.	9	No
57	English laurel	Prunus laurocerasus		1		Preserve.	7,6,4	No
58	English laurel	Prunus laurocerasus		1		Preserve.	10	No
59	Lemonwood tree	Pittosporum eugenioides		1		Preserve	20	Yes
60	Lemonwood tree	Pittosporum eugenioides		1		Preserve	20	Yes
61	Bronze loquat	Eriobotrya deflexa		1		Preserve.	6	No
62	Lemonwood tree	Pittosporum eugenioides	1			Remove. Low Suitability for Preservation. Not in good condition; decay, shrub-like.	9,9,9,7	Yes
63	Boxwood	Buxus sempervirens		1		Protect. Tree is in good condition and High Suitability for Preservation. Boxwoods of this size are extremely rare.	3,3,2.2 2	No
64	Boxwood	Buxus sempervirens		1		Protect. Tree is in good condition and High Suitability for Preservation. Boxwoods of this size are extremely rare.	5,4,4,4,4,4 ,4	No
66	English yew	Taxus baccata	1			Remove. In poor condition and Low Suitability for Preservation. Low bushy appearance will limit visibility of playground.	8,7,6	No
67	English laurel	Prunus laurocerasus	1			Remove. In poor condition and Low Suitability for Preservation. Trunks decaying and impact footprint of playground.	10,9,8	Yes
68	Victorian box	Pittosporums undulatum	1			Remove. Conflicts with playground footprint.	21	Yes
69	Douglas fir	Pseudotsuga menziesii		1		Preserve.	6	No
70	Boxwood	Buxus sempervirens	1			Remove. Conflicts with playground footprint and in poor condition with a low suitability for preservation.	7,6,6	No
71	Scarlet oak	Quercus coccinea		1		Preserve.	3	No
72	Eastern redbud	Cercis canadensis	1			Remove. Conflicts with playground footprint and has a low suitability for preservation.	5	No
73	Eastern redbud	Cercis canadensis	1			Remove. Conflicts with playground footprint and in poor condition with a low suitability for preservation.	6	No
74	Southern magnolia	Magnolia grandiflora			1	Relocate. Conflicts with playground footprint but tree is young, in good condition and has a high suitability for preservation.	6	No
75	Coast redwood	Sequoia sempervirens		1		Preserve. Outside project boundary.	29	Yes
76	Coast redwood	Sequoia sempervirens		1		Preserve. Outside project boundary.	45	Yes
77	Coast redwood	Sequoia sempervirens		1		Preserve. Outside project boundary.	41	Yes
78	Coast redwood	Sequoia sempervirens		1		Preserve. Outside project boundary.	41	Yes
79	Coast redwood	Sequoia sempervirens		1		Preserve. Outside project boundary.	40	Yes
80	Lemonwood tree	Pittosporum eugenioides	1			Remove. City Arborist requested that these be removed.	9,8	No
81	Lemonwood tree	Pittosporum eugenioides	1			Remove. City Arborist requested that these be removed.	8,6	No
82	Lemonwood tree	Pittosporum eugenioides	1			Remove. City Arborist requested that these be removed.	7,7	No
83	Nichol's willowleafed peppermint	Eucalyptus nicholii	1			Remove. City Arborist requested that these be removed.	43	Yes
84	Nichol's willowleafed peppermint	Eucalyptus nicholii	1			Remove. City Arborist requested that these be removed.	38	Yes
85	Red flowering gum	Corymbia ficifolia	1			Remove. Tree is in poor condition and has a low suitability for preservation with wounds and small crown providing little shade to picnic area.	32	Yes
86	Victorian box	Pittosporums undulatum	1			Remove. Tree is in poor condition and has a low suitability for preservation with a partial dead crown and declining health, providing limited shade to picnic area.	18	Yes
87	Victorian box	Pittosporums undulatum	1			Remove. Tree has dieback and conflicts with park circulation.	13	No
88	Canary Island pine	Pinus canariensis	1			Remove. Tree does not have a high suitability for preservation and conflicts with park circulation and views toward community center and specimen tree to be planted.	20	Yes
89	Crabapple	Malus sylvestris	1			Remove. Tree does not have a high suitability for preservation and conflicts with park circulation and views toward community center and specimen tree to be planted.	7	No
90	Marina madrone	Arbutus 'Marina'	1			Remove. Tree is in poor condition and has a low suitability for preservation, conflicting with park circulation and views toward community center and specimen tree to be planted.	11	No
91	Red oak	Quercus phellos		1		Preserve.	3	No
92	Marina madrone	Arbutus 'Marina'		1		Preserve.	13	No
93	Crabapple	Malus sylvestris		1		Preserve.	9	No
94	Cork oak	Quercus suber		1		Preserve.	10	No
95	Dawn redwood	Metasequoia glyptostroboides	1			Remove. Conflicts with basketball court.	22	Yes
96	Sweetgum	Liquidambar styraciflua	1			Remove. Conflicts with basketball court.	22	Yes
97	Canary Island pine	Pinus canariensis	1			Remove. Conflicts with basketball court.	3	No
98	Swamp mahogany	Eucalyptus robusta	1			Remove. City Arborist requested that these be removed.	33	Yes
99	Lemonwood tree	Pittosporum eugenioides	1			Remove. City Arborist requested that these be removed.	8,6	No
100	Lemonwood tree	Pittosporum eugenioides	1			Remove. City Arborist requested that these be removed.	8	No
101	Nichol's willowleafed peppermint	Eucalyptus nicholii	1			Remove. City Arborist requested that these be removed.	40	Yes
102	Lemonwood tree	Pittosporum eugenioides	1			Remove. City Arborist requested that these be removed.	8,7	No
103	Lemonwood tree	Pittosporum eugenioides	1			Remove. City Arborist requested that these be removed.	7	No
104	Lemonwood tree	Pittosporum eugenioides	1			Remove. City Arborist requested that these be removed.	9,9	No
105	Lemonwood tree	Pittosporum eugenioides	1			Remove. City Arborist requested that these be removed.	14	No
106	Marina madrone	Arbutus 'Marina'	1			Remove. City Arborist requested that these be removed.	6	No
107	Montezuma cypress	Taxodium mucronatum		1		Preserve.	28	Yes
108	Coast redwood	Sequoia sempervirens		1		Preserve.	20	Yes
109	Coast redwood	Sequoia sempervirens		1		Preserve.	22	Yes
110	Chinese flame tree	Koelreuteria bipinnata		1		Preserve.	18	Yes
		TOTAL	**30**	**32**	**1**			

NOTES:
1. TREE INFORMATION IS BASED ON ARBORIST REPORT PREPARED BY HORTSCIENCE, DATED MAY 21, 2018.
2. 'SIGNIFICANT TREE' CRITERIA IS BASED ON CITY OF BURLINGAME STANDARDS.

GROUP 4
ARCHITECTURE
RESEARCH +
PLANNING, INC
211 LINDEN AVENUE
SO. SAN FRANCISCO
CA 94080 USA
650 871 0709

rhaa
LANDSCAPE ARCHITECTURE + PLANNING
325 Geary Street, Suite 602, San Francisco, CA 94102
T 415 861 7900 F 415 861 7908 www.rhaa.com

WASHINGTON PARK PLAYGROUND, SPORTS COURT, AND PICNIC AREA

850 BURLINGAME AVE
BURLINGAME
CA 94010

LICENSED LANDSCAPE ARCHITECT
Mathew Lyons License Number
Signature
04/30/19
Date
03/25/19
1909
STATE OF CALIFORNIA

Project Arch.	----
CA REG.	----
PROJECT:	12421-04

ISSUE	DATE
SD SUBMITTAL	11/02/18
BID SET	03/25/19

SHEET TITLE AND NO.

TREE PROTECTION & REMOVAL PLAN

L1.0

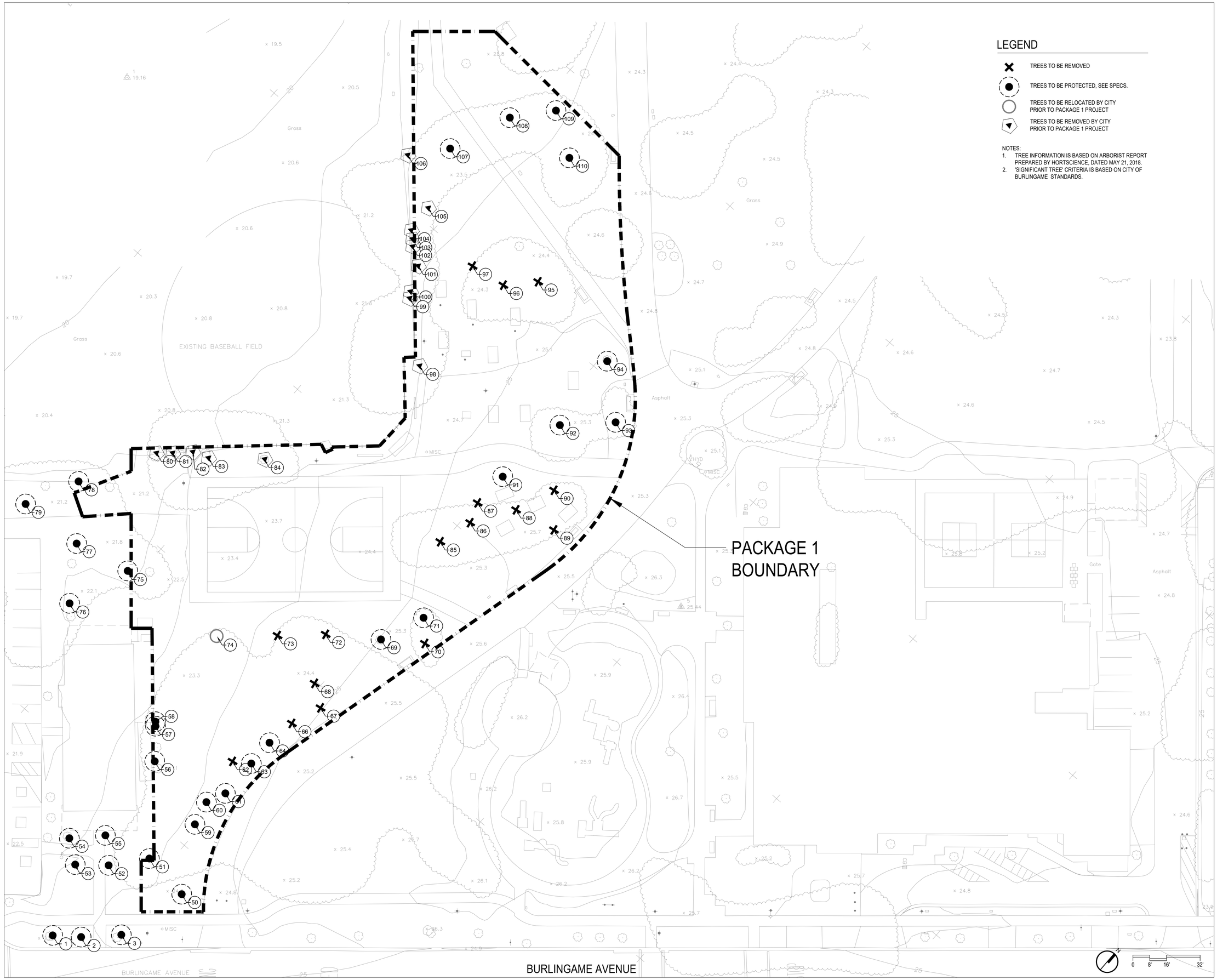

GROUP 4
ARCHITECTURE
RESEARCH +
PLANNING, INC
211 LINDEN AVENUE
SO. SAN FRANCISCO
CA 94080 USA
650 871 0709

rhaa
LANDSCAPE ARCHITECTURE + PLANNING
565 Commercial Street, Suite 402, San Francisco, CA 94102
T 415 861 7900 F 415 861 7908 www.rhaa.com

WASHINGTON PARK PLAYGROUND, SPORTS COURT, AND PICNIC AREA

850 BURLINGAME AVE
BURLINGAME
CA 94010

LICENSED LANDSCAPE ARCHITECT
Matthew Lincoln
Signature
04/20/18
Renewal Date
03/25/19
Date
STATE OF CALIFORNIA

Project Arch.	....
CA REG.	....
PROJECT:	12421-04

ISSUE	DATE
SD SUBMITTAL	11/02/18
BID SET	03/25/19

SHEET TITLE AND NO.

TREE PROTECTION & REMOVAL PLAN

L1.1

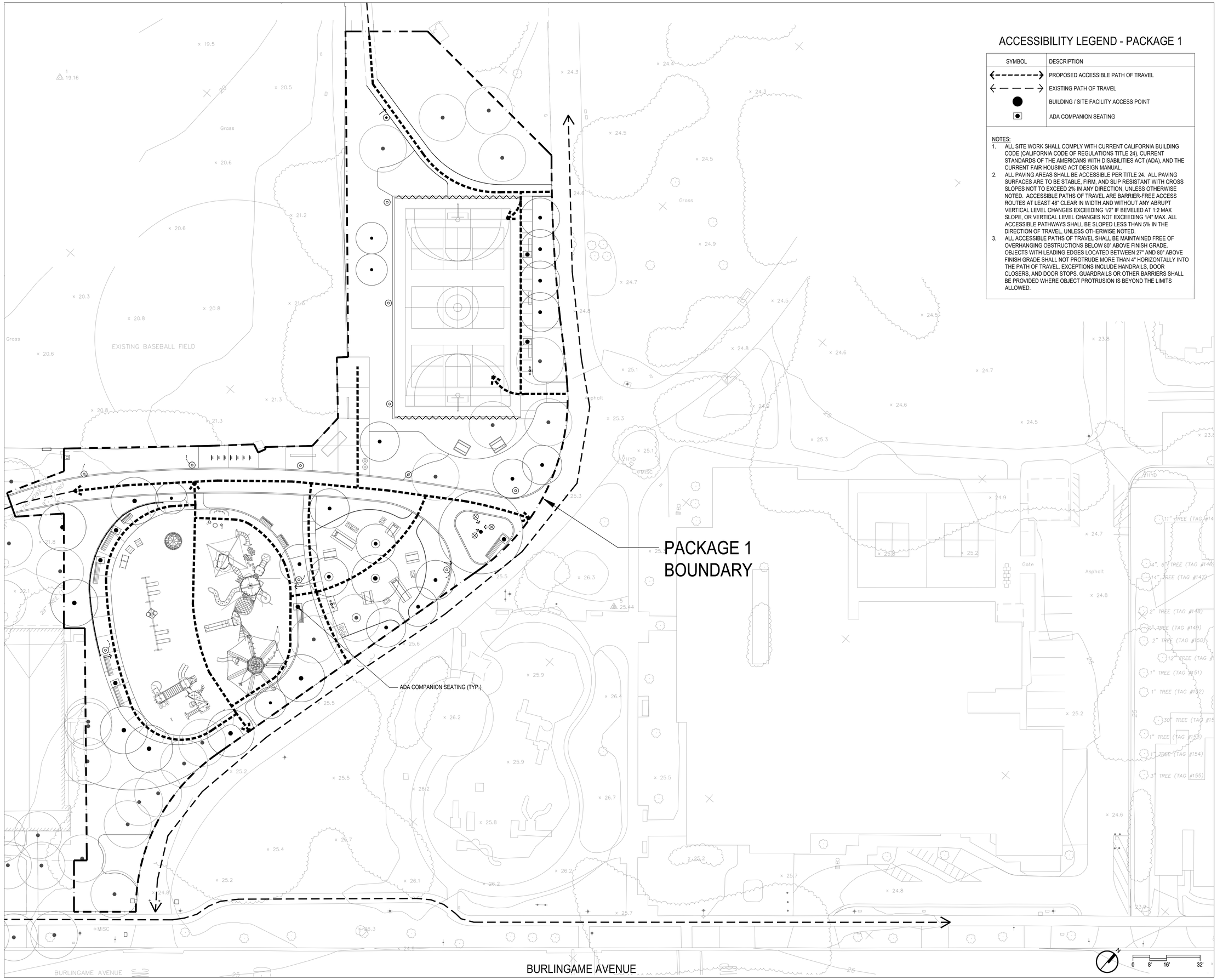

ACCESSIBILITY LEGEND - PACKAGE 1

SYMBOL	DESCRIPTION
⟷	PROPOSED ACCESSIBLE PATH OF TRAVEL
⟷	EXISTING PATH OF TRAVEL
●	BUILDING / SITE FACILITY ACCESS POINT
▣	ADA COMPANION SEATING

NOTES:

1. ALL SITE WORK SHALL COMPLY WITH CURRENT CALIFORNIA BUILDING CODE (CALIFORNIA CODE OF REGULATIONS TITLE 24), CURRENT STANDARDS OF THE AMERICANS WITH DISABILITIES ACT (ADA), AND THE CURRENT FAIR HOUSING ACT DESIGN MANUAL.
2. ALL PAVING AREAS SHALL BE ACCESSIBLE PER TITLE 24. ALL PAVING SURFACES ARE TO BE STABLE, FIRM, AND SLIP RESISTANT WITH CROSS SLOPES NOT TO EXCEED 2% IN ANY DIRECTION, UNLESS OTHERWISE NOTED. ACCESSIBLE PATHS OF TRAVEL ARE BARRIER-FREE ACCESS ROUTES AT LEAST 48" CLEAR IN WIDTH AND WITHOUT ANY ABRUPT VERTICAL LEVEL CHANGES EXCEEDING 1/2" IF BEVELED AT 1:2 MAX SLOPE, OR VERTICAL LEVEL CHANGES NOT EXCEEDING 1/4" MAX. ALL ACCESSIBLE PATHWAYS SHALL BE SLOPED LESS THAN 5% IN THE DIRECTION OF TRAVEL, UNLESS OTHERWISE NOTED.
3. ALL ACCESSIBLE PATHS OF TRAVEL SHALL BE MAINTAINED FREE OF OVERHANGING OBSTRUCTIONS BELOW 80" ABOVE FINISH GRADE. OBJECTS WITH LEADING EDGES LOCATED BETWEEN 27" AND 80" ABOVE FINISH GRADE SHALL NOT PROTRUDE MORE THAN 4" HORIZONTALLY INTO THE PATH OF TRAVEL. EXCEPTIONS INCLUDE HANDRAILS, DOOR CLOSERS, AND DOOR STOPS. GUARDRAILS OR OTHER BARRIERS SHALL BE PROVIDED WHERE OBJECT PROTRUSION IS BEYOND THE LIMITS ALLOWED.

GROUP 4
ARCHITECTURE
RESEARCH +
PLANNING, INC
211 LINDEN AVENUE
SO. SAN FRANCISCO
CA 94080 USA
650 871 0709

rhaa
LANDSCAPE ARCHITECTURE + PLANNING
983 Sherry Street, Suite 602, San Francisco, CA 94102
T 415 861 7900 F 415 861 7908 www.rhaa.com

WASHINGTON PARK PLAYGROUND, SPORTS COURT, AND PICNIC AREA

850 BURLINGAME AVE
BURLINGAME
CA 94010

LICENSED LANDSCAPE ARCHITECT
Signature
04/30/19
Renewal Date
STATE OF CALIFORNIA

Project Arch.	----
CA REG.	----
PROJECT:	12421-04

ISSUE	DATE
SD SUBMITTAL	11/02/18
BID SET	03/25/19

SHEET TITLE AND NO.
ACCESSIBILITY PLAN

L2.0

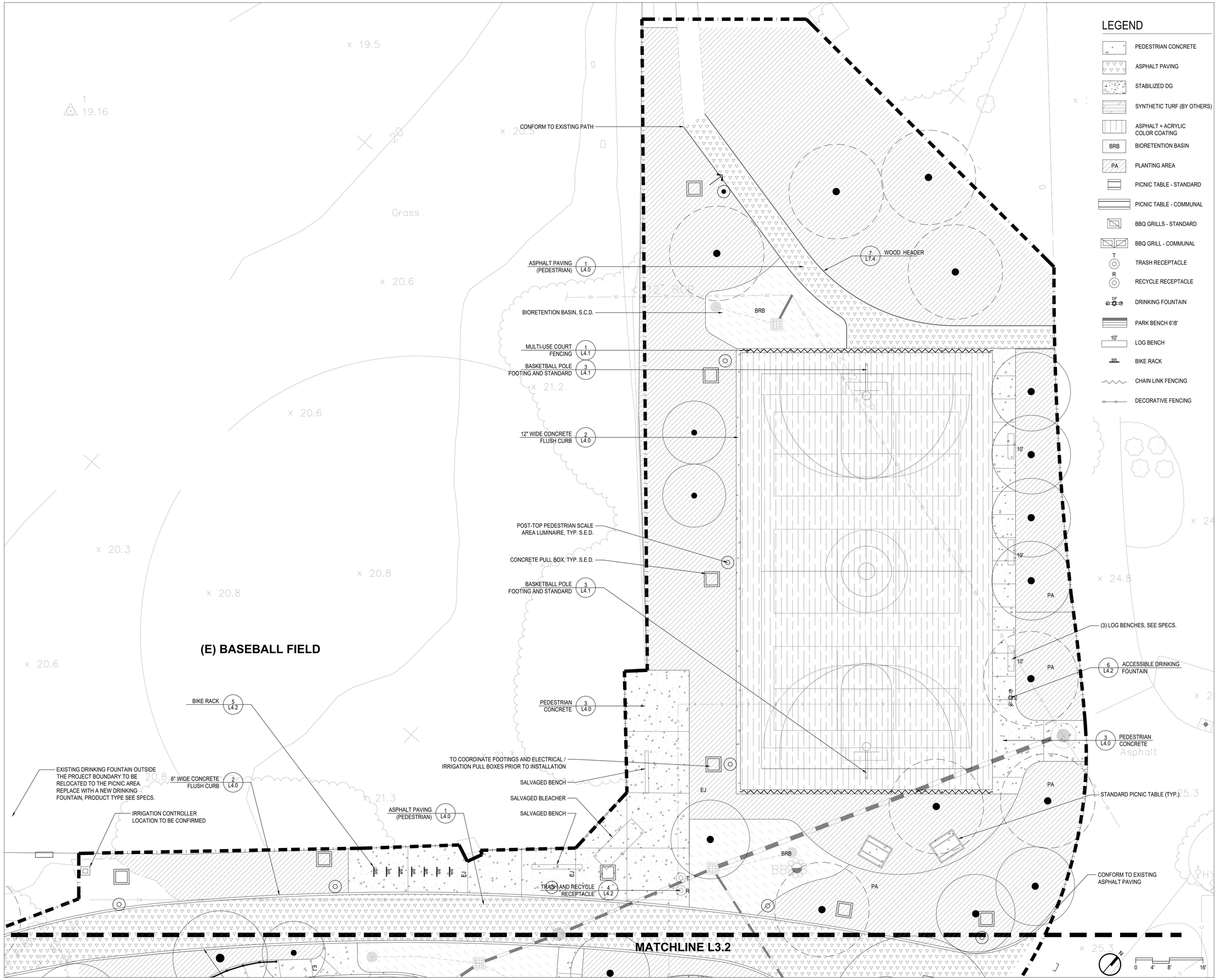

LEGEND

- PEDESTRIAN CONCRETE
- ASPHALT PAVING
- STABILIZED DG
- SYNTHETIC TURF (BY OTHERS)
- ASPHALT + ACRYLIC COLOR COATING
- BRB — BIORETENTION BASIN
- PA — PLANTING AREA
- PICNIC TABLE - STANDARD
- PICNIC TABLE - COMMUNAL
- BBQ GRILLS - STANDARD
- BBQ GRILL - COMMUNAL
- T — TRASH RECEPTACLE
- R — RECYCLE RECEPTACLE
- DF — DRINKING FOUNTAIN
- PARK BENCH 6'/8'
- 10' — LOG BENCH
- BR — BIKE RACK
- CHAIN LINK FENCING
- DECORATIVE FENCING

GROUP 4
ARCHITECTURE
RESEARCH +
PLANNING, INC
211 LINDEN AVENUE
SO. SAN FRANCISCO
CA 94080 USA
650 871 0709

rhaa
LANDSCAPE ARCHITECTURE + PLANNING
365 Geary Street, Suite 602, San Francisco, CA 94102
T 415 861 7900 F 415 861 7908 www.rhaa.com

WASHINGTON PARK PLAYGROUND, SPORTS COURT, AND PICNIC AREA

850 BURLINGAME AVE
BURLINGAME
CA 94010

LICENSED LANDSCAPE ARCHITECT
Certificate of Licensure
Signature
04/08/19
Renewal Date
03/25/19
Date
STATE OF CALIFORNIA

Project Arch.	----
CA REG.	----
PROJECT:	12421-04

ISSUE	DATE
SD SUBMITTAL	11/02/18
BID SET	03/25/19

SHEET TITLE AND NO.
CONSTRUCTION PLAN

L3.1

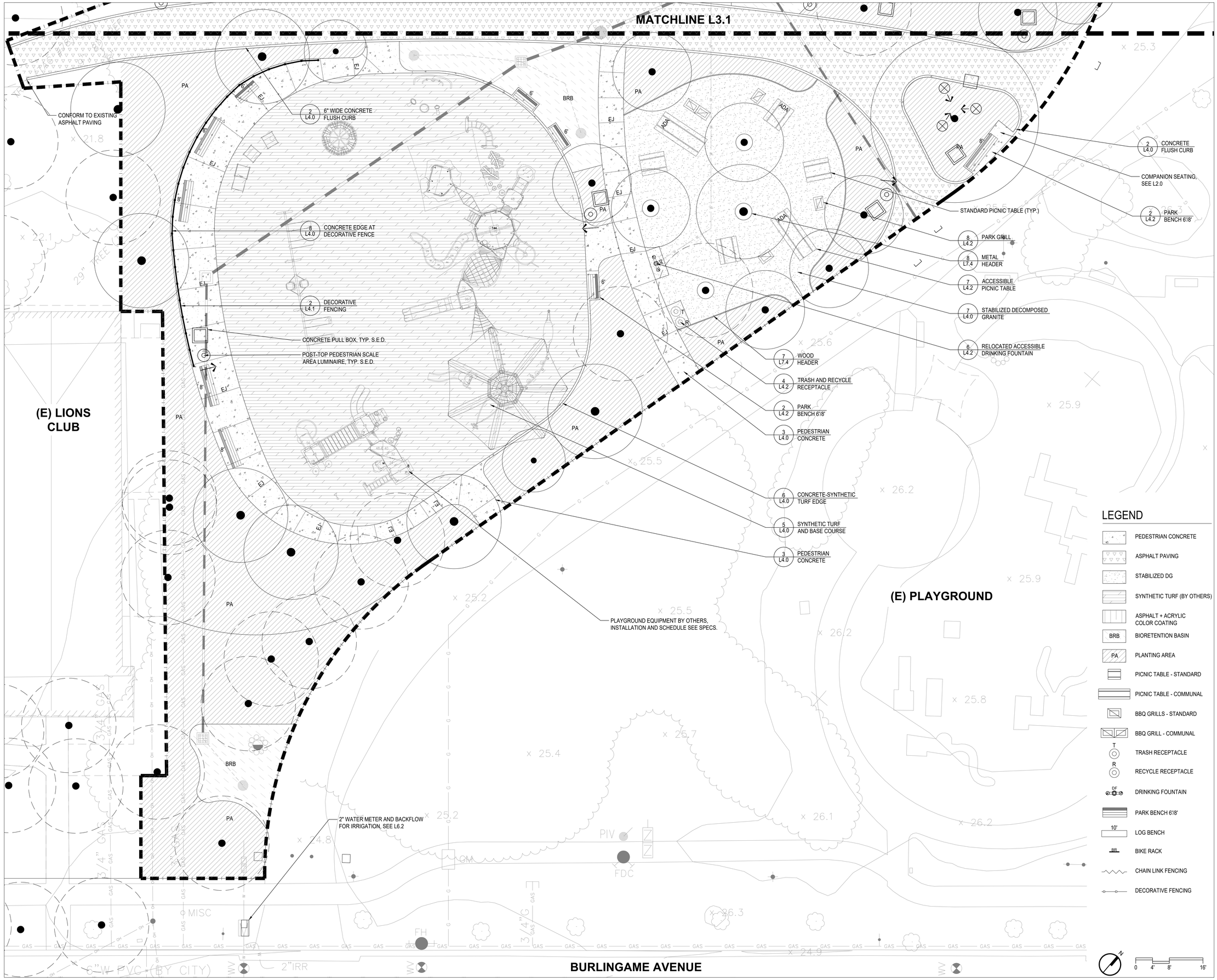

GROUP 4
ARCHITECTURE RESEARCH + PLANNING, INC
211 LINDEN AVENUE
SO. SAN FRANCISCO
CA 94080 USA
650·871·0709

rhaa
LANDSCAPE ARCHITECTURE + PLANNING
323 Geary Street, Suite 602, San Francisco, CA 94102
T 415 861 7900 F 415 861 7908 www.rhaa.com

THE CITY OF BURLINGAME CALIFORNIA INCORPORATED 1908

WASHINGTON PARK PLAYGROUND, SPORTS COURT, AND PICNIC AREA

850 BURLINGAME AVE
BURLINGAME
CA 94010

LICENSED LANDSCAPE ARCHITECT
Signature
04/30/19
Renewal Date
03/25/19
Date
STATE OF CALIFORNIA

Project Arch.	----
CA REG.	----
PROJECT:	12421-04

ISSUE	DATE
SD SUBMITTAL	11/02/18
BID SET	03/25/19

SHEET TITLE AND NO.
CONSTRUCTION PLAN

L3.2

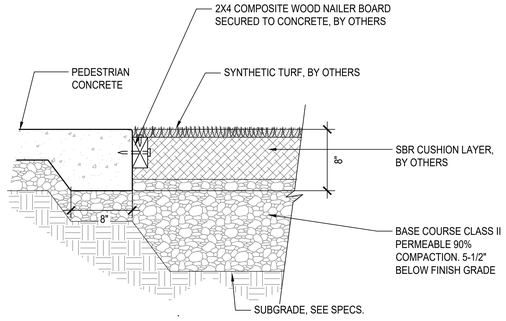

6 CONRETE-SYNTHETIC TURF EDGE

1-1/2" = 1'-0"

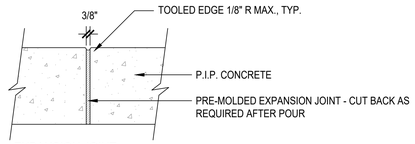

EXPANSION JOINT

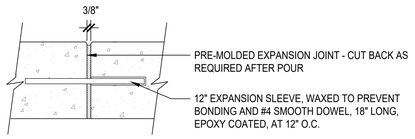

DOWEL AT EXPANSION JOINT

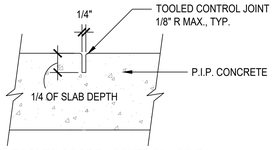

TOOLED SCORE / CONTROL JOINT

NOTES:
1. PROVIDE EJ'S AT ALL WALLS, COLUMNS AND SIMILAR VERTICAL STRUCTURES.
2. EXPANSION JOINTS AS SHOWN ON PLAN.
3. DOWEL IS TYPICAL AT ALL EJ'S EXCEPT AGAINST CURBS, WALLS, COLUMNS OR SIMILAR VERTICAL STRUCTURES, UNLESS OTHERWISE NOTED ON THE DRAWING.

4 EXPANSION AND CONTROL JOINTS

SCALE: 3" = 1'-0"

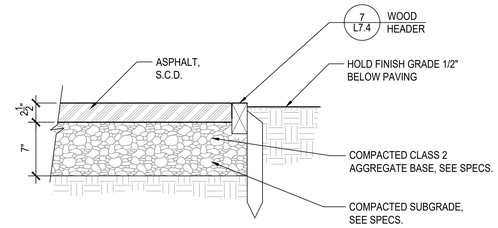

1 ASPHALT PAVING (PEDESTRIAN)

SCALE: 1-1/2" = 1'-0"

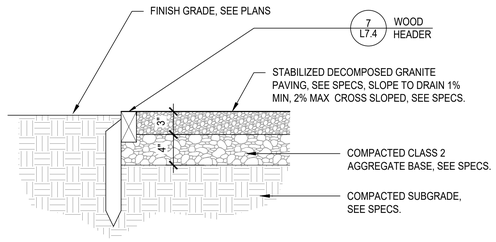

7 STABILIZED DECOMPOSED GRANITE

SCALE: 1-1/2" = 1'-0"

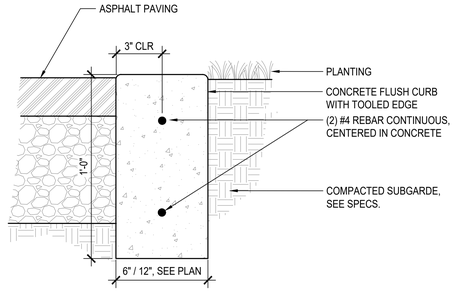

2 6" / 12" WIDE CONCRETE FLUSH CURB

SCALE: 3" = 1'-0"

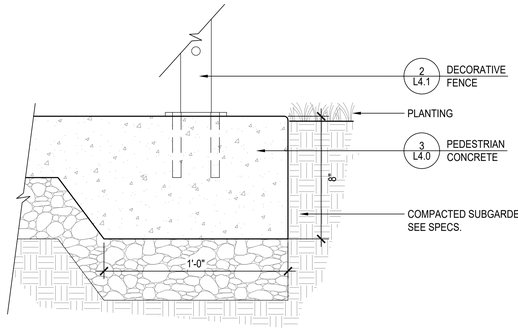

8 CONCRETE EDGE AT DECORATIVE FENCE

SCALE: 3" = 1'-0"

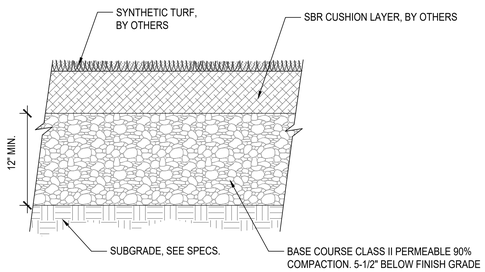

5 SYNTHETIC TURF BASE COURSE

SCALE: 1-1/2"=1'-0"

NOTES:
1. MEDIUM BROOM FINISH, UNLESS OTHERWISE NOTED ON PLANS.
2. PROVIDE SCORE JOINTS (SJ) AND EXPANSION JOINTS (EJ) AS SHOWN ON PLAN.
3. PROVIDE (EJ) MAX. 18' O.C. BOTH DIRECTIONS, ADJACENT TO BUILDINGS, WALLS, AND OTHER VERTICAL ELEMENTS, UNLESS OTHERWISE NOTED ON PLANS.

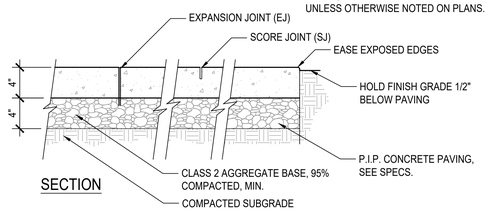

SECTION

3 PEDESTRIAN CONCRETE

SCALE: 1-1/2" = 1'-0"

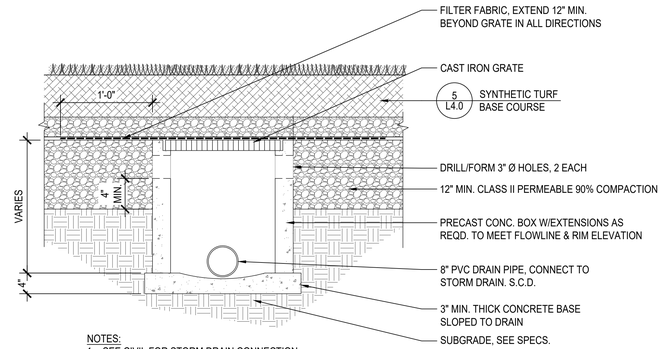

NOTES:
1. SEE CIVIL FOR STORM DRAIN CONNECTION.
2. SEE CIVIL RIM ELEVATIONS
3. AGGREGATE SUB-BASE TO BE SLOPED TO STORM DRAIN FOR POSITIVE DRAINAGE UNDER SAFETY SURFACING.

9 CATCH BASIN BELOW SAFETY SURFACING

NOT TO SCALE

GROUP 4
ARCHITECTURE
RESEARCH +
PLANNING, INC
211 LINDEN AVENUE
SO. SAN FRANCISCO
CA 94080 USA
650 871 0709

rhaa
LANDSCAPE ARCHITECTURE + PLANNING
303 Geary Street, Suite 602, San Francisco, CA 94102
T 415 861 7900 F 415 861 7908 www.rhaa.com

THE CITY OF BURLINGAME CALIFORNIA INCORPORATED 1908

WASHINGTON PARK PLAYGROUND, SPORTS COURT, AND PICNIC AREA

850 BURLINGAME AVE
BURLINGAME
CA 94010

LICENSED LANDSCAPE ARCHITECT
Signature
04/26/19
Renewal Date
03/25/19
Date
STATE OF CALIFORNIA

Project Arch.	----
CA REG.	----
PROJECT:	12421-04

ISSUE	DATE
SD SUBMITTAL	11/02/18
BID SET	03/25/19

SHEET TITLE AND NO.
CONSTRUCTION DETAILS

L4.0

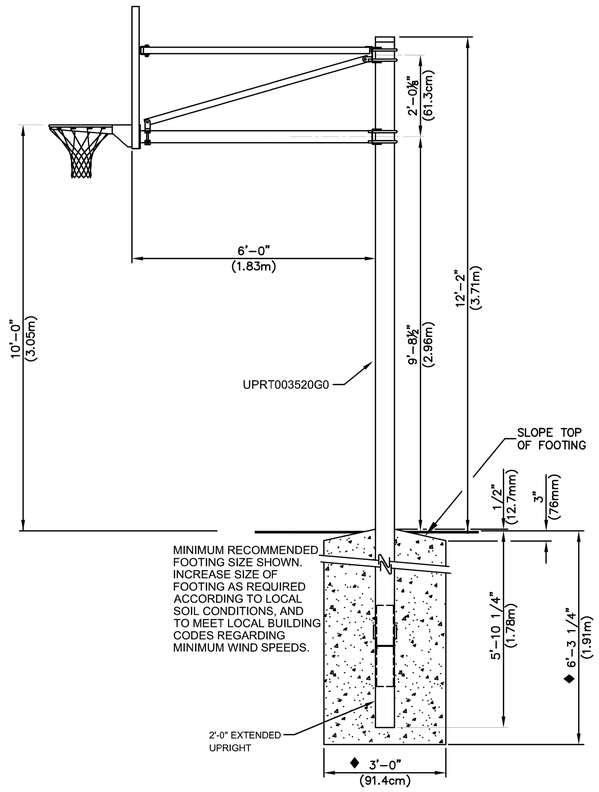

3 BASKETBALL POLE FOOTING AND STANDARD

SCALE: 1" = 1'-0"

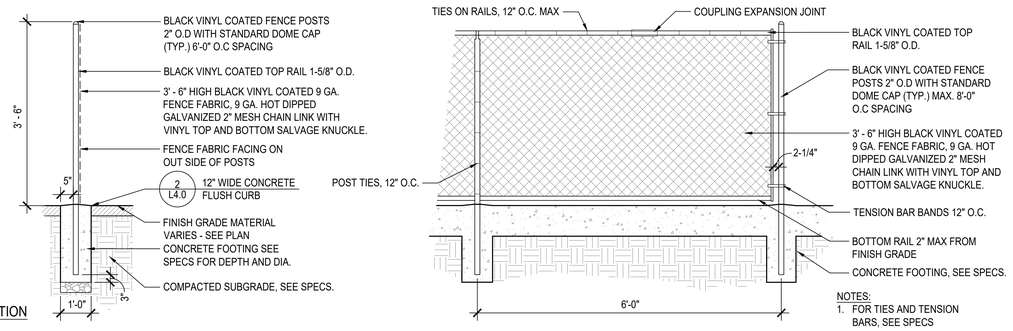

1 MULTI-USE COURT FENCING

SCALE: 1/2" = 1'-0"

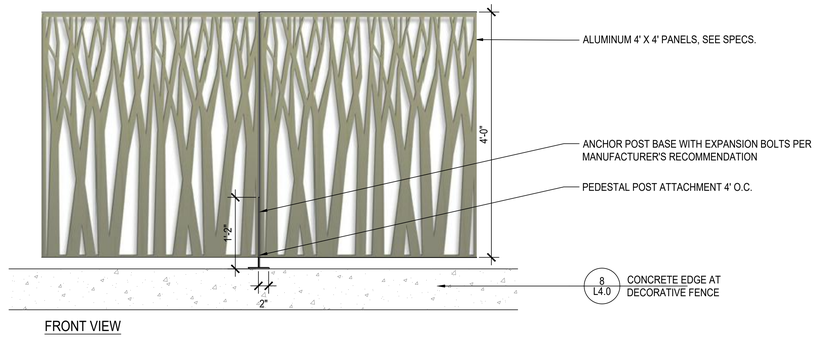

FRONT VIEW

2 DECORATIVE FENCING

SCALE: 1" = 1'-0"

GROUP 4
ARCHITECTURE
RESEARCH +
PLANNING, INC
211 LINDEN AVENUE
SO. SAN FRANCISCO
CA 94080 USA
650 871 0709

rhaa
LANDSCAPE ARCHITECTURE + PLANNING
303 Geary Street, Suite 602, San Francisco, CA 94102
T 415 861 7900 F 415 861 7908 www.rhaa.com

WASHINGTON PARK PLAYGROUND, SPORTS COURT, AND PICNIC AREA

850 BURLINGAME AVE
BURLINGAME
CA 94010

LICENSED LANDSCAPE ARCHITECT
Date of License
Signature
04/30/19
Renewal Date
03/25/19
Date
STATE OF CALIFORNIA

Project Arch.	----
CA REG.	----
PROJECT:	12421-04

ISSUE	DATE
SD SUBMITTAL	11/02/18
BID SET	03/25/19

SHEET TITLE AND NO.
CONSTRUCTION DETAILS

L4.1

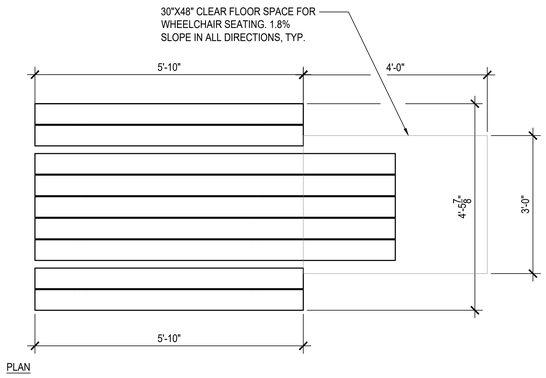

7 ACCESSIBLE PICNIC TABLE

SCALE: 3/4" = 1'-0"

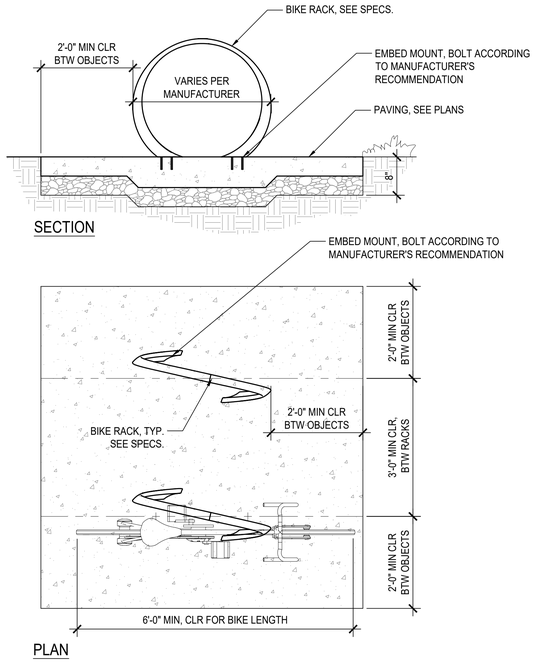

5 BIKE RACK - CIRCULAR

SCALE: 3/4" = 1'-0"

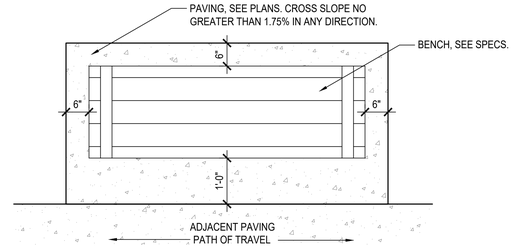

1 BENCH - PLAN

SCALE: 3/4" = 1'-0"

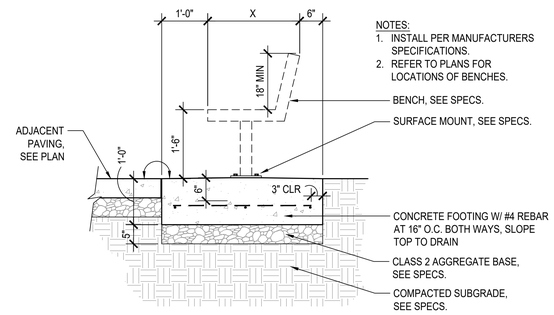

2 BENCH - SURFACE MOUNT

SCALE: 3/4" = 1'-0"

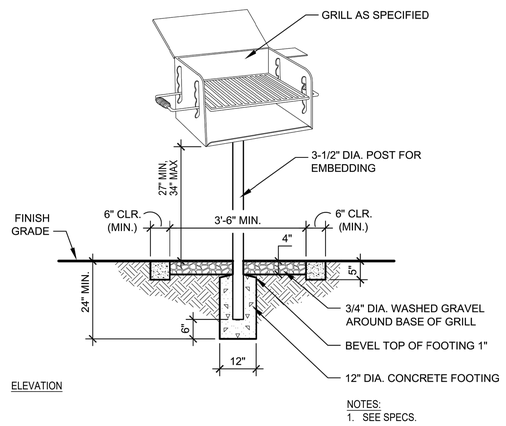

8 PARK GRILL

NTS

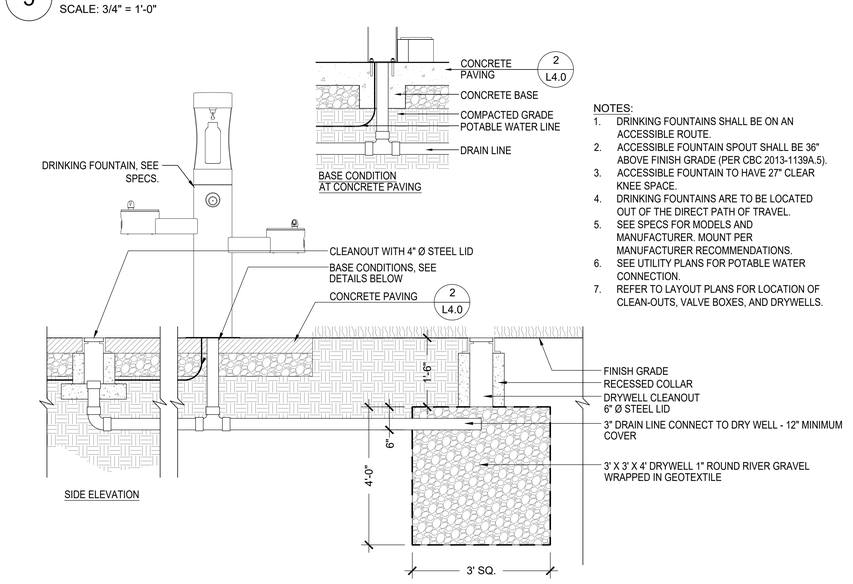

6 ACCESSIBLE DRINKING FOUNTAIN

SCALE: 3/4" = 1'-0"

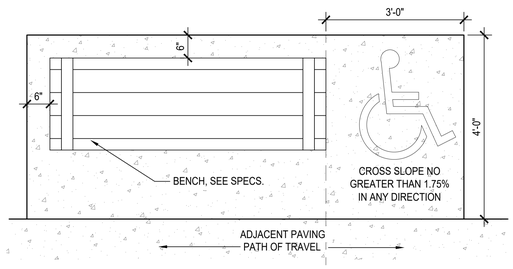

3 BENCH WITH ADA COMPANION SEATING

SCALE: 3/4" = 1'-0"

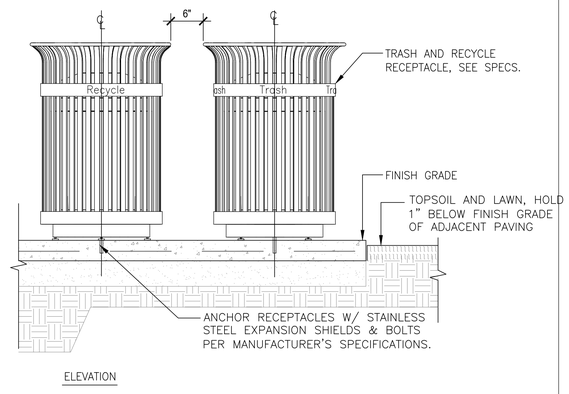

4 TRASH AND RECYCLE RECEPTACLE

SCALE: 1" = 1'-0"

GROUP 4
ARCHITECTURE
RESEARCH +
PLANNING, INC
211 LINDEN AVENUE
SO. SAN FRANCISCO
CA 94080 USA
650 871 0709

rhaa
LANDSCAPE ARCHITECTURE + PLANNING
303 Geary Street, Suite 602, San Francisco, CA 94102
T 415 861 7900 F 415 861 7908 www.rhaa.com

THE CITY OF BURLINGAME CALIFORNIA INCORPORATED 1908

WASHINGTON PARK PLAYGROUND, SPORTS COURT, AND PICNIC AREA

850 BURLINGAME AVE
BURLINGAME
CA 94010

LICENSED LANDSCAPE ARCHITECT
Signature
04/30/19
Renewal Date
03/25/19
Date
STATE OF CALIFORNIA

Project Arch.	----
CA REG.	----
PROJECT:	12421-04

ISSUE	DATE
SD SUBMITTAL	11/02/18
BID SET	03/25/19

SHEET TITLE AND NO.
CONSTRUCTION DETAILS

L4.2

1 MULTI-USE COURT STRIPING PLAN
SCALE: 1/8" = 1'-0"

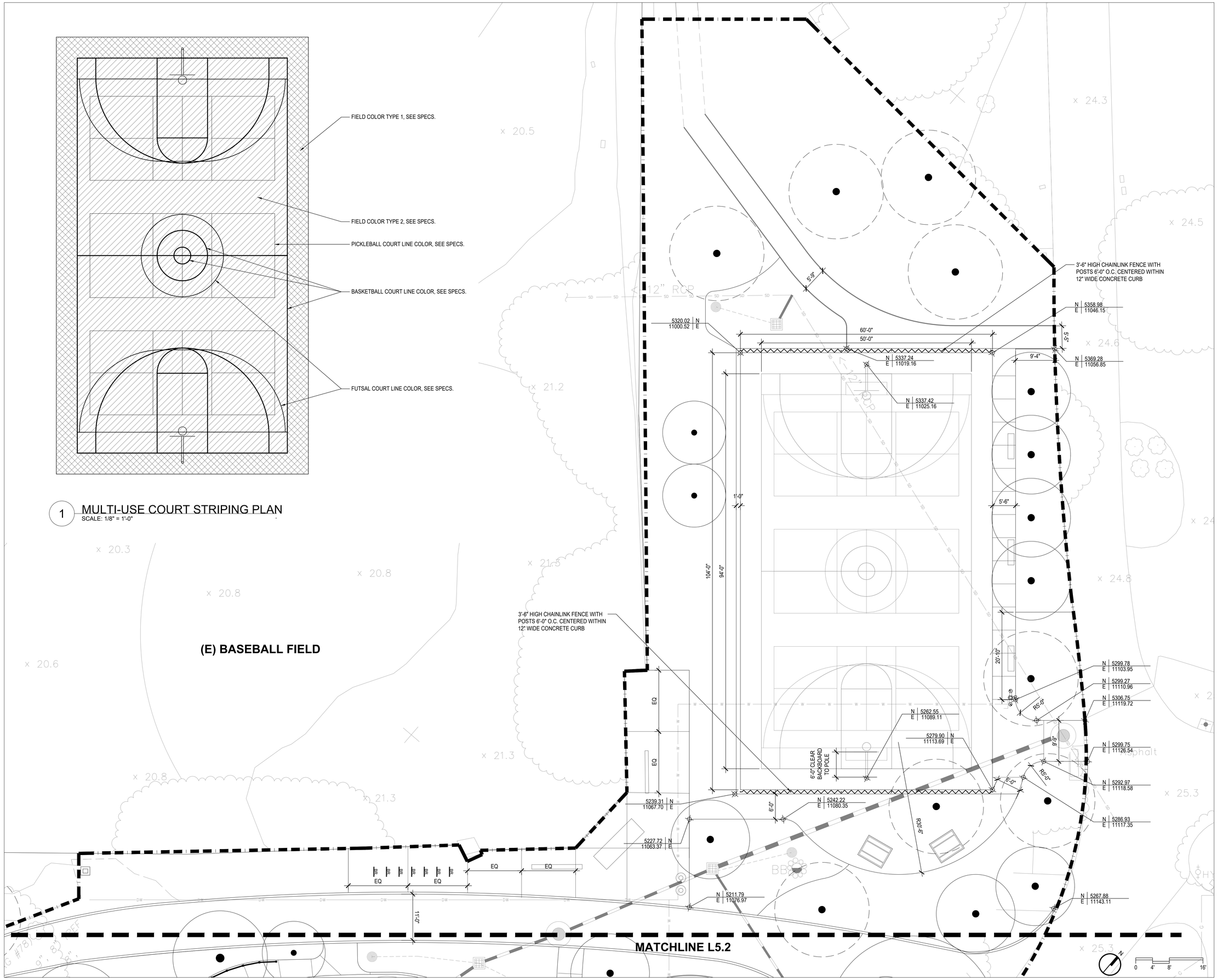

GROUP 4
ARCHITECTURE
RESEARCH +
PLANNING, INC
211 LINDEN AVENUE
SO. SAN FRANCISCO
CA 94080 USA
650 871 0709

rhaa
LANDSCAPE ARCHITECTURE + PLANNING
365 Geary Street, Suite 602, San Francisco, CA 94102
T 415 861 7900 F 415 861 7908 www.rhaa.com

WASHINGTON PARK PLAYGROUND, SPORTS COURT, AND PICNIC AREA

850 BURLINGAME AVE
BURLINGAME
CA 94010

LICENSED LANDSCAPE ARCHITECT
Matthew Livoreno
Signature
04/30/19
Date
03/25/19
Date
STATE OF CALIFORNIA

Project Arch.	----
CA REG.	----
PROJECT:	12421-04

ISSUE	DATE
SD SUBMITTAL	11/02/18
BID SET	03/25/19

SHEET TITLE AND NO.
LAYOUT PLAN

L5.1

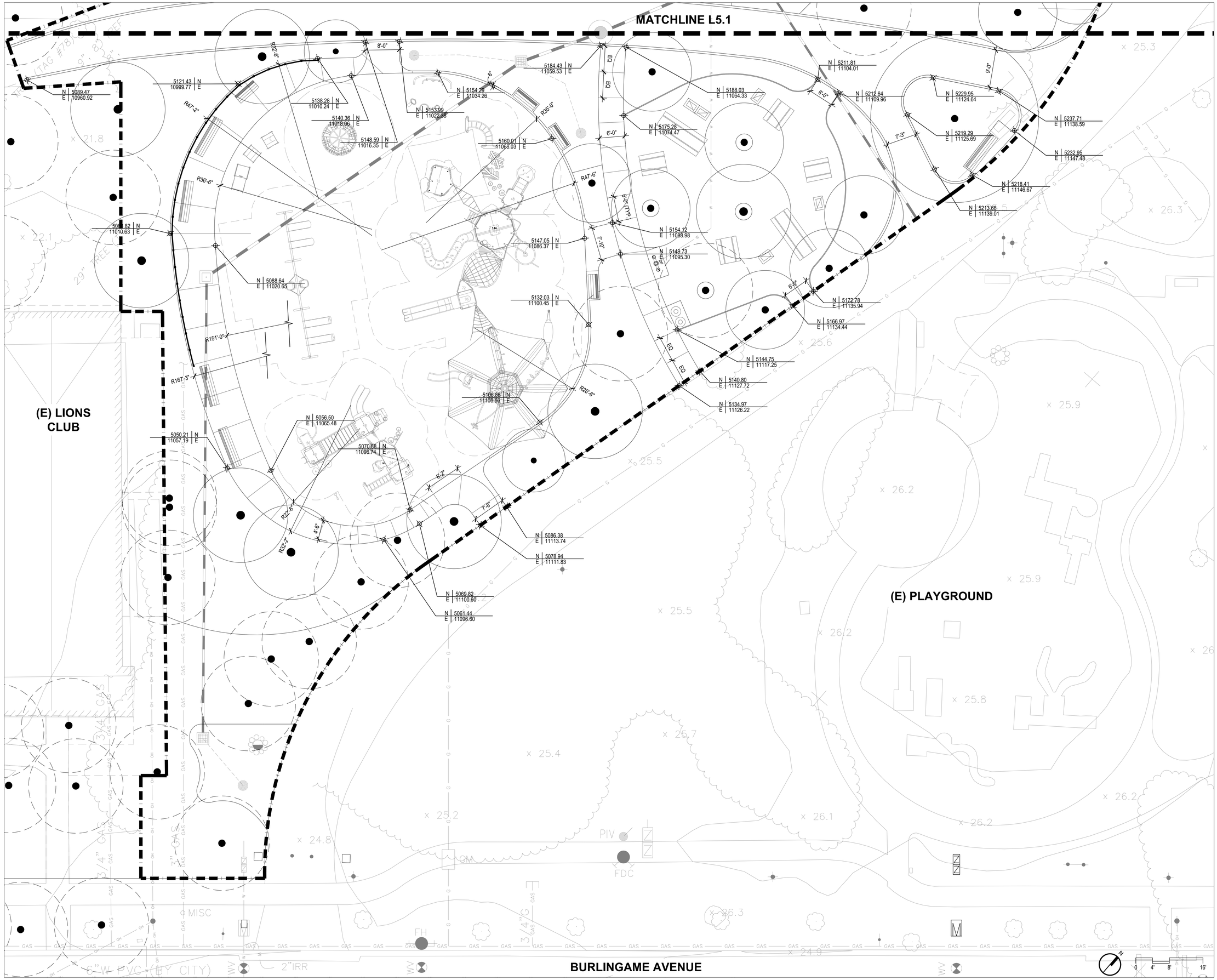

GROUP 4
ARCHITECTURE
RESEARCH +
PLANNING, INC
211 LINDEN AVENUE
SO. SAN FRANCISCO
CA 94080 USA
650·871·0709

rhaa
LANDSCAPE ARCHITECTURE + PLANNING
323 Geary Street, Suite 602, San Francisco, CA 94102
T 415 861 7900 F 415 861 7908 www.rhaa.com

THE CITY OF BURLINGAME CALIFORNIA INCORPORATED 1908

WASHINGTON PARK PLAYGROUND, SPORTS COURT, AND PICNIC AREA

850 BURLINGAME AVE
BURLINGAME
CA 94010

LICENSED LANDSCAPE ARCHITECT
Nathan Lynch
Signature
04/30/19
Renewal Date
03/25/19
Date
STATE OF CALIFORNIA

Project Arch.	----
CA REG.	----
PROJECT:	12421-04

ISSUE	DATE
SD SUBMITTAL	11/02/18
BID SET	03/25/19

SHEET TITLE AND NO.
LAYOUT PLAN

L5.2

IRRIGATION NOTES

1. THESE IRRIGATION DRAWINGS ARE DIAGRAMMATIC AND INDICATIVE OF THE WORK TO BE INSTALLED. ALL PIPING, VALVES, AND OTHER IRRIGATION COMPONENTS MAY BE SHOWN WITHIN PAVED AREAS FOR GRAPHIC CLARITY ONLY AND ARE TO BE INSTALLED WITHIN PLANTING AREAS. DUE TO THE SCALE OF THE DRAWINGS, IT IS NOT POSSIBLE TO INDICATE ALL OFFSETS, FITTINGS, SLEEVES, CONDUIT, AND OTHER ITEMS WHICH MAY BE REQUIRED. INVESTIGATE THE STRUCTURAL AND FINISHED CONDITION AFFECTING THE CONTRACT WORK INCLUDING OBSTRUCTIONS, GRADE DIFFERENCES OR AREA DIMENSIONAL DIFFERENCES. IN THE EVENT OF FIELD DISCREPANCY WITH CONTRACT DOCUMENTS, PLAN THE INSTALLATION WORK ACCORDINGLY BY NOTIFICATION AND APPROVAL OF THE OWNER'S AUTHORIZED REPRESENTATIVE AND ACCORDING TO THE CONTRACT SPECIFICATIONS. NOTIFY AND COORDINATE IRRIGATION CONTRACT WORK WITH APPLICABLE CONTRACTORS FOR THE LOCATION AND INSTALLATION OF PIPE, CONDUIT OR SLEEVES THROUGH OR UNDER WALLS, ROADWAYS, PAVING AND STRUCTURES BEFORE CONSTRUCTION. IN THE EVENT THESE NOTIFICATIONS ARE NOT PERFORMED, THE CONTRACTOR ASSUMES FULL RESPONSIBILITY FOR REQUIRED REVISIONS.

2. THE CONTRACTOR SHALL COMPLY WITH ALL APPLICABLE CODES, STANDARDS, AND REGULATIONS. ALL WORK AND MATERIALS SHALL BE IN FULL ACCORDANCE WITH THE LATEST RULES AND REGULATIONS OF THE NATIONAL ELECTRIC CODE; THE UNIFORM PLUMBING CODE, PUBLISHED BY THE WESTERN PLUMBING OFFICIALS ASSOCIATION; AND OTHER STATE OR LOCAL LAWS OR REGULATIONS. NOTHING IN THESE DRAWINGS IS TO BE CONSTRUED TO PERMIT WORK NOT CONFORMING TO THESE CODES OR REGULATIONS. THE CONTRACTOR SHALL FURNISH WITHOUT ANY EXTRA CHARGE, ANY ADDITIONAL MATERIAL AND LABOR WHEN REQUIRED BY THE COMPLIANCE WITH THESE CODES AND REGULATIONS.

3. THE CONTRACTOR SHALL COORDINATE INSTALLATION OF IRRIGATION SYSTEM WITH LAYOUT AND INSTALLATION OF THE PLANT MATERIALS TO INSURE THAT THERE WILL BE COMPLETE AND UNIFORM IRRIGATION COVERAGE OF PLANTING IN ACCORDANCE WITH THESE DRAWINGS, AND CONTRACT DOCUMENTS. THE IRRIGATION LAYOUT SHALL BE CHECKED BY THE CONTRACTOR AND OWNER'S AUTHORIZED REPRESENTATIVE PRIOR TO CONSTRUCTION TO DETERMINE IF ANY CHANGES, DELETIONS, OR ADDITIONS ARE REQUIRED. IRRIGATION SYSTEM SHALL BE INSTALLED AND TESTED PRIOR TO INSTALLATION OF PLANT MATERIAL.

4. THE INTENT OF THIS IRRIGATION SYSTEM IS TO PROVIDE THE MINIMUM AMOUNT OF WATER REQUIRED TO SUSTAIN GOOD PLANT HEALTH.

5. IT IS THE RESPONSIBILITY OF THE MAINTENANCE CONTRACTOR AND/OR OWNER TO PROGRAM THE IRRIGATION CONTROLLER(S) TO PROVIDE THE MINIMUM AMOUNT OF WATER NEEDED TO SUSTAIN GOOD PLANT HEALTH. THIS INCLUDES MAKING ADJUSTMENTS TO THE PROGRAM FOR SEASONAL WEATHER CHANGES, PLANT MATERIAL, WATER REQUIREMENTS, MOUNDS, SLOPES, SUN, SHADE AND WIND EXPOSURE.

6. IT IS THE RESPONSIBILITY OF A LICENSED ELECTRICAL CONTRACTOR TO PROVIDE 120 VOLT A.C. (2.5 AMP DEMAND PER CONTROLLER) ELECTRICAL SERVICE TO THE CONTROLLER LOCATION(S). IT IS THE RESPONSIBILITY OF THE IRRIGATION CONTRACTOR TO COORDINATE THE ELECTRICAL SERVICE STUB–OUT TO THE CONTROLLER(S). PROVIDE PROPER GROUNDING PER CONTROLLER MANUFACTURER'S INSTRUCTIONS AND IN ACCORDANCE WITH LOCAL CODES.

7. PROVIDE EACH CONTROLLER WITH ITS OWN GROUND ROD. SEPARATE THE GROUND RODS BY A MINIMUM OF EIGHT FEET. THE GROUND ROD SHALL BE AN EIGHT FOOT LONG BY 5/8" DIAMETER U.L. APPROVED COPPER CLAD ROD. INSTALL NO MORE THAN 6" OF THE GROUND ROD ABOVE FINISH GRADE. CONNECT #6 GAUGE WIRE WITH A U.L. APPROVED GROUND ROD CLAMP TO ROD AND BACK TO GROUND SCREW AT BASE OF CONTROLLER WITH APPROPRIATE CONNECTOR. MAKE THIS WIRE AS SHORT AS POSSIBLE, AVOIDING KINKS OR BENDING.

8. INSTALL NEW BATTERIES IN THE IRRIGATION CONTROLLER(S) TO RETAIN PROGRAM IN MEMORY DURING TEMPORARY POWER FAILURES. USE QUANTITY, TYPE AND SIZE REQUIRED AS PER CONTROLLER MANUFACTURER'S INSTRUCTIONS.

9. SCHEDULE A MEETING WHICH INCLUDES REPRESENTATIVES OF THE IRRIGATION CONTROLLER MANUFACTURER, THE MAINTENANCE CONTRACTOR, THE OWNER AND THE IRRIGATION CONTRACTOR AT THE SITE FOR INSTRUCTION ON THE PROPER PROGRAMMING AND OPERATION OF THE IRRIGATION CONTROLLER.

10. INSTALL 3" DETECTABLE TAPE ABOVE ALL PRESSURIZED MAIN LINES AS DETAILED. USE CHRISTY MODEL #TA–DT–3–BIRR FOR POTABLE IRRIGATION SYSTEMS OR #TA–DT–3–PRW FOR RECYCLED IRRIGATION WATER SYSTEMS.

11. PROVIDE EACH IRRIGATION CONTROLLER WITH ITS OWN INDEPENDENT LOW VOLTAGE COMMON GROUND WIRE.

12. IRRIGATION CONTROL WIRES: SOLID COPPER WITH U.L. APPROVAL FOR DIRECT BURIAL IN GROUND. COMMON GROUND WIRE: SIZE #12–1 WIRE WITH A WHITE INSULATING JACKET. CONTROL WIRE SERVICING REMOTE CONTROL VALVES: SIZE #14–1 WIRE WITH INSULATING JACKET OF COLOR OTHER THAN WHITE. SPLICES SHALL BE MADE WITH 3M–DBY SEAL PACKS OR APPROVED EQUAL.

13. INSTALL TWO SPARE CONTROL WIRES OF A DIFFERENT COLOR ALONG THE ENTIRE MAIN LINE. LOOP 36" EXCESS WIRE INTO EACH SINGLE VALVE BOX AND INTO ONE VALVE BOX IN EACH GROUP OF VALVES.

14. SPLICING OF LOW VOLTAGE WIRES IS PERMITTED IN VALVE BOXES ONLY. LEAVE A 36" LONG, 1" DIAMETER COIL OF EXCESS WIRE AT EACH SPLICE AND A 36" LONG EXPANSION LOOP EVERY 100 FEET ALONG WIRE RUN. TAPE WIRES TOGETHER EVERY TEN FEET. DO NOT TAPE WIRES TOGETHER WHERE CONTAINED WITHIN SLEEVING OR CONDUIT.

15. INSTALL GREEN PLASTIC VALVE BOXES WITH BOLT DOWN, NON HINGED COVER MARKED "IRRIGATION". BOX BODY SHALL HAVE KNOCK OUTS. ACCEPTABLE VALVE BOX MANUFACTURER'S INCLUDE NDS, CARSON OR APPROVED EQUAL.

15. INSTALL REMOTE CONTROL VALVE BOXES 12" FROM WALK, CURB, BUILDING OR LANDSCAPE FEATURE. AT MULTIPLE VALVE BOX GROUPS, INSTALL EACH BOX AN EQUAL DISTANCE FROM THE WALK, CURB, BUILDING OR LANDSCAPE FEATURE AND PROVIDE 12" BETWEEN BOX TOPS. ALIGN THE SHORT SIDE OF RECTANGULAR VALVE BOXES PARALLEL TO WALK, CURB, BUILDING OR LANDSCAPE FEATURE.

16. VALVE LOCATIONS SHOWN ARE DIAGRAMMATIC. INSTALL IN GROUND COVER/SHRUB AREAS (AVOID LAWN AREAS WHERE POSSIBLE).

17. THE CONTRACTOR SHALL LABEL CONTROL LINE WIRE AT EACH REMOTE CONTROL VALVE WITH A 2 1/4" X 2 3/4" POLYURETHANE I.D. TAG, INDICATING IDENTIFICATION NUMBER OF VALVE (CONTROLLER AND STATION NUMBER). ATTACH LABEL TO CONTROL WIRE. THE CONTRACTOR SHALL PERMANENTLY STAMP ALL VALVE BOX LIDS WITH APPROPRIATE IDENTIFICATION AS NOTED IN CONSTRUCTION DETAILS.

18. THE REMOTE CONTROL VALVES SPECIFIED ON THE DRAWINGS IS A PRESSURE REDUCING TYPE. SET THE DISCHARGE PRESSURE AS FOLLOWS:

A. SPRAY HEADS =4 0 PSI
B. ROTARY HEADS = 60 PSI
C. DRIP EMITTERS = 35 PSI
D. BUBBLERS = 30 PSI

19. INSTALL A GATE VALVE TO ISOLATE EACH REMOTE CONTROL VALVE OR GROUP OF RCV'S LOCATED TOGETHER. GATE VALVE SIZE SHALL BE SAME AS THE LARGEST REMOTE CONTROL VALVE IN MANIFOLD.

20. FOR 2 1/2" AND LARGER MAIN LINE PIPING INSIDE SLEEVES USE 1120–315 PSI PVC PLASTIC PIPE WITH SCHEDULE 40 PVC COUPLINGS. DO NOT INSTALL GASKETED COUPLINGS INSIDE SLEEVES

21. FLUSH AND ADJUST IRRIGATION OUTLETS AND NOZZLES FOR OPTIMUM PERFORMANCE AND TO PREVENT OVER SPRAY ONTO WALKS, ROADWAYS, AND/OR BUILDINGS. SELECT THE BEST DEGREE OF THE ARC AND RADIUS TO FIT THE EXISTING SITE CONDITIONS AND THROTTLE THE FLOW CONTROL AT EACH VALVE TO OBTAIN THE OPTIMUM OPERATING PRESSURE FOR EACH CONTROL ZONE.

22. SET SPRINKLER HEADS PERPENDICULAR TO FINISH GRADE.

23. INSTALL NON POP–UP ROTARY SPRINKLERS 24" FROM WALKS AND CURBS.

24. INSTALL ROTARY POP–UP SPRINKLERS IN SHRUB AND GROUND COVER AREAS WITHIN A CONCRETE SPRINKLER BLOCK, CHRISTY "TYPE C"–20" SQUARE W/8" HOLE, 4" THICK AT HOLE AND 3" THICK AT EDGE OF BLOCK.

25. LOCATE BUBBLERS ON UPHILL SIDE OF PLANT OR TREE.

26. INSTALL A HUNTER HCV SERIES, KBI CV SERIES, OR APPROVED EQUAL SPRING LOADED CHECK VALVE IN SPRINKLER RISER ASSEMBLIES WHERE LOW OUTLET DRAINAGE WILL CAUSE EROSION AND/OR EXCESS WATER.

27. WHERE IT IS NECESSARY TO EXCAVATE ADJACENT TO EXISTING TREES, USE CAUTION TO AVOID INJURY TO TREES AND TREE ROOTS. EXCAVATE BY HAND IN AREAS WHERE TWO (2) INCH AND LARGER ROOTS OCCUR. BACK FILL TRENCHES ADJACENT TO TREE WITHIN TWENTY–FOUR (24) HOURS. WHERE THIS IS NOT POSSIBLE, SHADE THE SIDE OF THE TRENCH ADJACENT TO THE TREE WITH WET BURLAP OR CANVAS.

28. NOTIFY LOCAL JURISDICTIONS FOR INSPECTION AND TESTING OF INSTALLED BACKFLOW PREVENTION DEVICE.

29. THE IRRIGATION SYSTEM DESIGN IS BASED ON THE MINIMUM OPERATING PRESSURE SHOWN ON THE IRRIGATION DRAWINGS. VERIFY WATER PRESSURE PRIOR TO CONSTRUCTION. REPORT ANY DIFFERENCE BETWEEN THE WATER PRESSURE INDICATED ON THE DRAWINGS AND THE ACTUAL PRESSURE READING AT THE IRRIGATION POINT OF CONNECTION TO THE OWNER'S AUTHORIZED REPRESENTATIVE.

30. IRRIGATION DEMAND: REFER TO PLANS.

31. THE EXISTING MAIN LINE SHOWN ON THE DRAWINGS IS DIAGRAMMATIC. VERIFY AND LOCATE EXISTING MAIN LINE IN FIELD. REPORT TO ARCHITECT IN WRITING ANY DEVIATION OF EXISTING MAIN LINE LOCATION FROM THAT SHOWN ON THE DRAWINGS.

32. AT POINT OF CONNECTION AT EXISTING MAIN LINE FOR NEW REMOTE CONTROL VALVES OR QUICK COUPLING VALVES, INSTALL A SERVICE SADDLE WITH REQUIRED TAPPED OUTLET SIZE. ROMAC 202S, OR APPROVED EQUAL.

33. AT POINTS OF CONNECTION BETWEEN EXISTING MAIN LINE AND A NEW MAIN LINE BRANCH, USE THE FOLLOWING PROCEDURE:

A. REMOVE A PORTION OF EXISTING MAINLINE
B. FABRICATE A TEE AND NIPPLE ASSEMBLY REQUIRED FOR CONNECTION OF NEW MAIN LINE BETWEEN REMOVED PORTION OF EXISTING MAIN LINE. REFER TO SPECIFICATIONS FOR TYPE OF FITTINGS AND PIPE REQUIRED.

34. PIPE SIZING SHOWN ON THE DRAWINGS IS TYPICAL. AS CHANGES IN LAYOUT OCCUR DURING STAKING AND CONSTRUCTION THE SIZE MAY NEED TO BE ADJUSTED ACCORDINGLY.

35. PIPE THREAD SEALANT COMPOUND SHALL BE RECTOR SEAL #5.

36. THE LANDSCAPE CONTRACTOR SHALL BE RESPONSIBLE FOR MINOR CHANGES IN THE IRRIGATION LAYOUT DUE TO OBSTRUCTIONS NOT SHOWN ON THE IRRIGATION DRAWINGS SUCH AS LIGHTS, FIRE HYDRANTS, SIGNS, ELECTRICAL ENCLOSURES, ETC.

37. THE LANDSCAPE CONTRACTOR SHALL BE RESPONSIBLE FOR CHANGES IN THE IRRIGATION LAYOUT AND VALVE ZONING DUE TO VARIATIONS IN THE EXISTING SITE CONDITIONS SUCH AS EXPOSURE FROM BUILDINGS, TRELLISES, TREES, ETC., AS WELL AS SLOPE AND SOIL CONDITIONS. THE CONTRACTOR SHALL NOTIFY THE LANDSCAPE ARCHITECT AND IRRIGATION CONSULTANT OF THE PROPOSED CHANGES PRIOR TO INSTALLATION FOR APPROVAL.

38. THE LANDSCAPE CONTRACTOR IS RESPONSIBLE FOR ADJUSTING THE IRRIGATION SYSTEM DESIGN IF THE PLANTING DESIGN CHANGES FROM THE ORIGINAL PLAN AND NEEDS TO ADAPT TO THE NEW PLANTING DESIGN. THE LANDSCAPE CONTRACTOR NEEDS TO NOTIFY THE LANDSCAPE ARCHITECT AND IRRIGATION CONSULTANT OF PROPOSED CHANGES PRIOR TO INSTALLATION FOR APPROVAL.

39. WHEN WORK OF THIS SECTION HAS BEEN COMPLETED AND SUCH OTHER TIMES AS MAY BE DIRECTED, REMOVE ALL TRASH, DEBRIS, SURPLUS MATERIALS AND EQUIPMENT FROM SITE.

40. CONTRACTOR SHALL BE RESPONSIBLE FOR SUPPLEMENTAL HAND WATERING OF ALL PLANT MATERIAL WITHIN DRIPLINE AREAS UNTIL THE PLANTS ARE SUFFICIENTLY ESTABLISHED.

41. VERIFY LOCATIONS OF ALL IRRIGATION COMPONENTS INSTALLED WITHIN A VALVE BOX WITH LANDSCAPE ARCHITECT PRIOR TO INSTALLATION. DO NOT INSTALL UNTIL LANDSCAPE ARCHITECT PROVIDES ACCEPTABLE LOCATIONS.

IRRIGATION LEGEND

SYMBOL	MODEL NUMBER	DESCRIPTION	NOZZLE GPM	OPERATING PSI	OPERATING RADIUS (FEET)
	I–20–06–SS–3.0SR	HUNTER POP–UP GEAR DRIVEN ROTOR (TURF)	3.0	50	20–25
	I–20–06–SS–1.5SR	HUNTER POP–UP GEAR DRIVEN ROTOR (TURF)	1.5	50	20–25
	I–20–06–SS–2.0SR	HUNTER POP–UP GEAR DRIVEN ROTOR (TURF)	2.0	50	16–18
	I–20–06–SS–2.0SR	HUNTER POP–UP GEAR DRIVEN ROTOR (TURF)	2.0	50	16–18
	I–20–06–SS–1.0SR	HUNTER POP–UP GEAR DRIVEN ROTOR (TURF)	1.0	50	16–18
	570Z–06P–XF–COM/ MP1000–360–HT	TORO POP–UP SPRAY SPRINKLER WITH HUNTER MP ROTATOR NOZZLE (TURF)	0.75	40	12–14
	570Z–06P–XF–COM/ MP1000–90–HT	TORO POP–UP SPRAY SPRINKLER WITH HUNTER MP ROTATOR NOZZLE (TURF)	0.37,0.19	40	12–14
	570Z–06P–PRX–COM/ MP1000–360–HT	TORO POP–UP SPRAY SPRINKLER WITH HUNTER MP ROTATOR NOZZLE (TURF)	0.65	30	10–12
	570Z–06P–PRX–COM/ MP1000–90–HT	TORO POP–UP SPRAY SPRINKLER WITH HUNTER MP ROTATOR NOZZLE (TURF)	0.32,0.16	30	10–12
	570Z–06P–PRX–COM/ MP800–360–HT	TORO POP–UP SPRAY SPRINKLER WITH HUNTER MP ROTATOR NOZZLE (TURF)	0.5	40	8–10
	570Z–06P–PRX–COM/ MP800–90–HT	TORO POP–UP SPRAY SPRINKLER WITH HUNTER MP ROTATOR NOZZLE (TURF)	0.42,0.23	40	8–10
	570Z–06P–PRX–COM/ MP800–90–HT	TORO POP–UP SPRAY SPRINKLER WITH HUNTER MP ROTATOR NOZZLE (TURF)	0.33,0.17	30	6–8
	570Z–12P–PRX–COM/ O–T–15HP,15QP	TORO POP–UP SPRAY SPRINKLER (SHRUB)	1.2,0.6	30	12–15
	570Z–12P–PRX–COM/ O–T–12FP,12HP,12QP	TORO POP–UP SPRAY SPRINKLER (SHRUB)	1.5,0.75,.37	30	10–12
	570Z–12P–PRX–COM/ O–T–10FP,10HP,10QP	TORO POP–UP SPRAY SPRINKLER (SHRUB)	1,0.5,0.23	30	8–10
	570Z–12P–PRX–COM/ O–T–8HP,8QP	TORO POP–UP SPRAY SPRINKLER (SHRUB)	.33,.17	30	6–8
	PCB–25	HUNTER BUBBLER (TREE) 2 PER TREE	0.5	30	TRICKLE
	PROS–04/ PCN–10	HUNTER POP–UP STREAM BUBBLER (TREES IN DG), 2 PER TREE	0.46	30	STREAM
	PLD–BV	HUNTER MANUAL FLUSH VALVE			
	PLD–AVR	HUNTER AIR/VACUUM RELIEF VALVE			
	PROS–06–SI/4A	HUNTER POP–UP SPRINKLER WITH SIDE INLET AND A CLOSED 4' NOZZLE TO BE USED AS DRIPLINE INDICATOR			
	ICV SERIES	HUNTER REMOTE CONTROL VALVE			
	ICV–101G–AS–40/ HY–100	HUNTER REMOTE CONTROL VALVE WITH A 40 PSI PRESSURE REGULATOR AND A 1" FILTER.			
	33 DNP	RAIN BIRD QUICK COUPLING VALVE			
	LGT–XX–SS	LEEMCO STAINLESS STEEL GATE VALVE (LINE SIZE)			
	2160H	GRISWOLD 1" NORMALLY OPEN MASTER VALVE			
	FM–1B	Calsense FLOW SENSOR			
	2000L	GRISWOLD 2" NORMALLY CLOSED MASTER VALVE			
	FM–2	Calsense FLOW SENSOR			
	–	EXISTING 2" BACKFLOW PREVENTER.			
	CS3–48–SSE–PED/	Calsense CS300 STATION CONVENTIONAL WIRE CONTROLLER IN A PEDESTAL ENCLOSURE			

MAIN LINE:	MAIN LINE: 4" AND LARGER: 1120–200 PSI RING–TITE PVC PLASTIC PIPE WITH DUCTILE IRON FITTINGS. 24" COVER.
MAIN LINE:	3" AND SMALLER: 1120–SCHEDULE 40 PVC PLASTIC PIPE WITH SCHEDULE 40 PVC SOLVENT WELD FITTINGS. 18" COVER.
LATERAL LINE:	3/4" AND LARGER: 1120–SCHEDULE 40 PVC PLASTIC PIPE WITH SCHEDULE 40 PVC SOLVENT WELD FITTINGS. 12" COVER.
DRIPLINE LATERAL LINE:	3/4" AND LARGER: 1120–SCHEDULE 40 PVC PLASTIC PIPE WITH SCHEDULE 40 PVC SOLVENT WELD FITTINGS. 12" COVER.
SLEEVING:	SCHEDULE 40 PVC PLASTIC PIPE. COVER TO BE AS INDICATED IN SPECIFICATIONS OR AS INDICATED ABOVE FOR PIPE DEPTH OF COVER.

DRIPLINE REMOTE CONTROL VALVE

DRIP ZONE: HUNTER HDL SERIES DRIPLINE WITH PLD LOC FITTINGS, PART #HDL–06–18–250. TUBING TO BE INSTALLED 4" BELOW GRADE IN A 18" O.C. GRID ACCORDING TO DETAILS. SIZE EXHAUST HEADERS AS FOLLOWS: 1": 0–10 GPM, 1.25": 11–20 GPM. ALL EXHAUST HEADERS SHALL BE 1" SCH 40 PVC OR 1" SCH 40 FLEXIBLE PVC. USE SCH. 40 PVC SOLVENT WELD FITTINGS. EXTEND PVC HEADERS TO THE ENDS OF ALL DRIP ZONES TO BALANCE FLOW IF REQUIRED. SEE DETAILS FOR FURTHER INFORMATION.

FLOW SENSOR/ MASTER CABLE: APPROXIMATE ROUTING OF FLOW SENSOR AND MASTER VALVE WIRES IN SEPARATE 1" CONDUITS. REFER TO DETAILS FOR MORE INFORMATION.

Irrigation Consultant:
Russell D. Mitchell Associates, Inc.
2760 Camino Diablo
Walnut Creek, CA 94597
tel 925.939.3985 ♦ fax 925.932.5671
www.rmairrigation.com

GROUP 4
ARCHITECTURE RESEARCH + PLANNING, INC
211 LINDEN AVENUE
SO. SAN FRANCISCO
CA 94080 USA
650 871 0709

rhaa
LANDSCAPE ARCHITECTURE + PLANNING
323 Geary Street, Suite 602, San Francisco, CA 94102
T 415 861 7900 F 415 861 7908 www.rhaa.com

THE CITY OF BURLINGAME CALIFORNIA INCORPORATED 1908

WASHINGTON PARK PLAYGROUND, SPORTS COURT, AND PICNIC AREA

850 BURLINGAME AVE BURLINGAME CA 94010

LICENSED LANDSCAPE ARCHITECT — STATE OF CALIFORNIA — Signature 04/30/19 Renewal Date 03/25/19 Date

Project Arch.	----
CA REG.	----
PROJECT:	12421-04

ISSUE	DATE
SD SUBMITTAL	11/02/18
BID SET	03/25/19

SHEET TITLE AND NO.

IRRIGATION NOTES & LEGEND

L6.0

NOTES:

1. ONE BUBBLER SYMBOL IS SHOWN AT TREES FOR GRAPHIC CLARITY ONLY. INSTALL MINIMUM TWO BUBBLERS AT EACH TREE. INSTALL REQUIRED NUMBER OF BUBBLERS AS DETAILED.
2. IRRIGATION EQUIPMENT MAY BE SHOWN WITHIN HARDSCAPE FOR GRAPHIC CLARITY ONLY. INSTALL ALL IRRIGATION EQUIPMENT WITHIN PLANTED AREAS. IRRIGATION PIPE AND WIRE CROSSING BENEATH HARDSCAPE SURFACES SHALL BE CONTAINED WITHIN SLEEVING OR SCHEDULE 40 PVC CONDUIT. SLEEVING SIZE SHALL BE A MINIMUM OF TWO TIMES THE AGGREGATE DIAMETER OF ALL PIPES CONTAINED WITH SLEEVE. PROVIDE VERTICAL SWEEP FOR ALL ELECTRICAL CONDUIT ON EACH SIDE OF HARDSCAPE AND TERMINATE ENDS AT 12" MINIMUM DEPTH AND 12" FROM HARDSCAPE SURFACE.
3. UNSIZED LATERAL LINE PIPING LOCATED DOWN STREAM OF 1" PIPING SHALL BE 3/4" IN SIZE (TYPICAL).
4. SIZING OF LATERAL PIPE SHALL BE AS FOLLOWS:

0.75"	0–6 GPM
1"	7–12 GPM
1.25"	21–32 GPM
1.5"	21–32 GPM

5. SIZING OF LATERAL PIPE FOR DRIPLINE (12" O.C. GRID WITH 0.6 GPH OR LESS EMITTERS) SHALL BE AS FOLLOWS:

0.75	0–500 FT
1"	501–1100 FT
1.25"	1101–2000 FT

6. SIZING OF LATERAL PIPE FOR DRIPLINE (18" O.C. GRID WITH 0.6 GPH OR LESS EMITTERS) SHALL BE AS FOLLOW:

0.75"	0–1100 FT
1"	1101–2200 FT
1.25"	2201–3600 FT

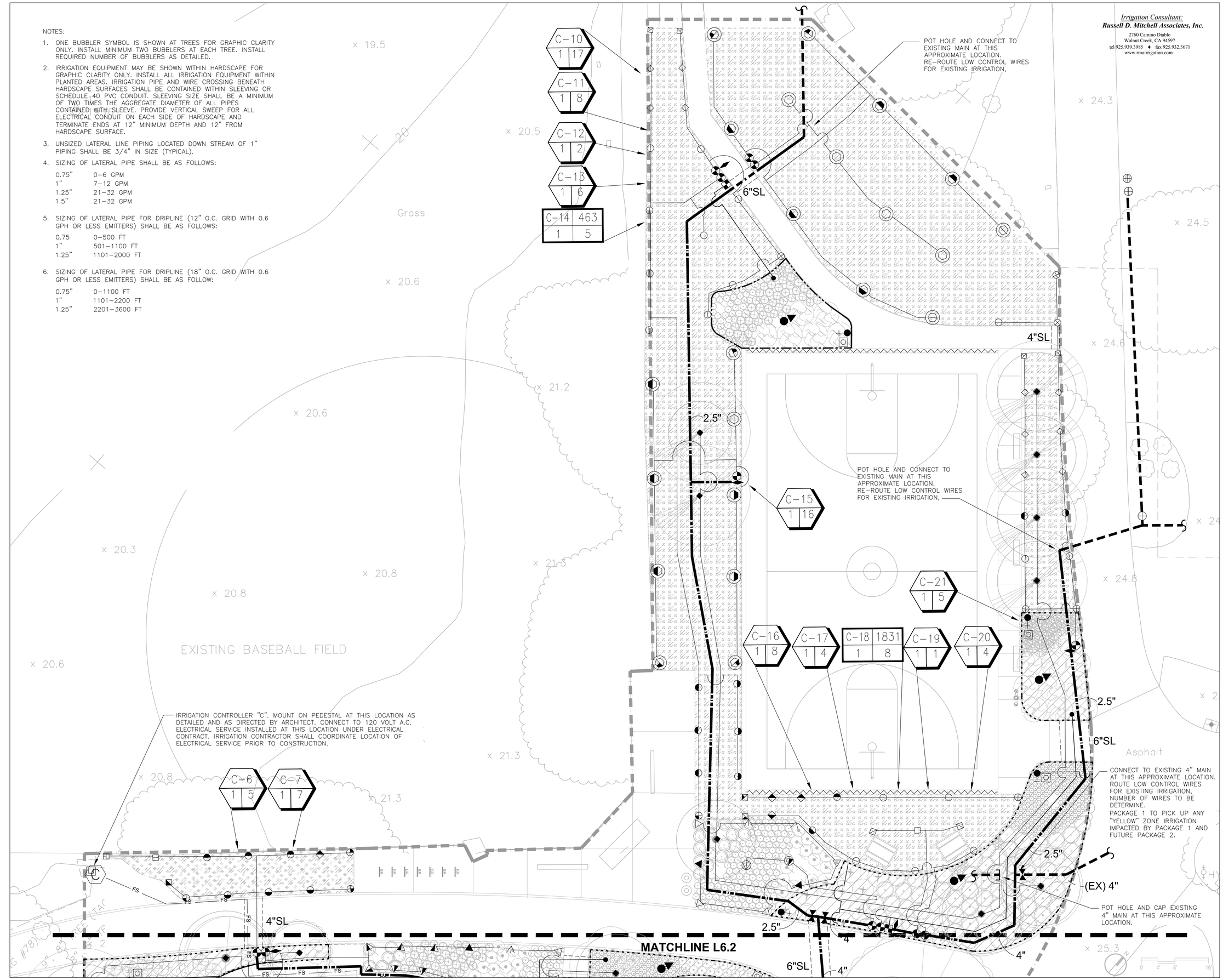

Irrigation Consultant:
Russell D. Mitchell Associates, Inc.
2760 Camino Diablo
Walnut Creek, CA 94597
tel 925.939.3985 ♦ fax 925.932.5671
www.rmairrigation.com

GROUP 4
ARCHITECTURE
RESEARCH +
PLANNING, INC
211 LINDEN AVENUE
SO. SAN FRANCISCO
CA 94080 USA
650 871 0709

rhaa
LANDSCAPE ARCHITECTURE + PLANNING
303 Geary Street, Suite 402, San Francisco, CA 94102
T 415 861 7900 F 415 861 7908 www.rhaa.com

THE CITY OF BURLINGAME CALIFORNIA INCORPORATED 1908

WASHINGTON PARK PLAYGROUND, SPORTS COURT, AND PICNIC AREA

850 BURLINGAME AVE
BURLINGAME
CA 94010

LICENSED LANDSCAPE ARCHITECT
Heather Lindsay
Signature
04/20/18
Renewal Date
03/25/19
Date
STATE OF CALIFORNIA

Project Arch.	....
CA REG.	....
PROJECT:	12421-04

ISSUE	DATE
SD SUBMITTAL	11/02/18
BID SET	03/25/19

SHEET TITLE AND NO.
IRRIGATION PLAN

L6.1

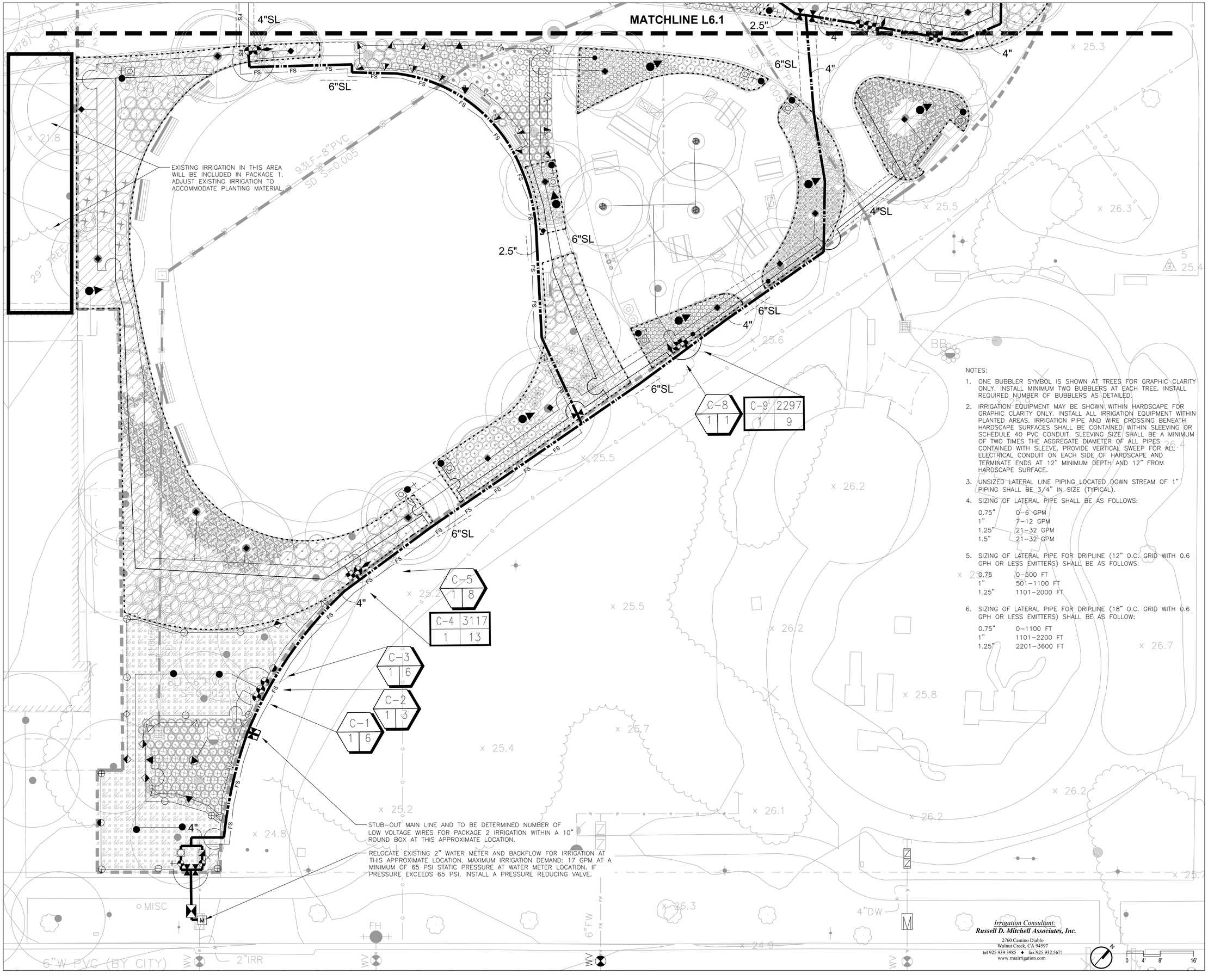

NOTES:

1. ONE BUBBLER SYMBOL IS SHOWN AT TREES FOR GRAPHIC CLARITY ONLY. INSTALL MINIMUM TWO BUBBLERS AT EACH TREE. INSTALL REQUIRED NUMBER OF BUBBLERS AS DETAILED.
2. IRRIGATION EQUIPMENT MAY BE SHOWN WITHIN HARDSCAPE FOR GRAPHIC CLARITY ONLY. INSTALL ALL IRRIGATION EQUIPMENT WITHIN PLANTED AREAS. IRRIGATION PIPE AND WIRE CROSSING BENEATH HARDSCAPE SURFACES SHALL BE CONTAINED WITHIN SLEEVING OR SCHEDULE 40 PVC CONDUIT. SLEEVING SIZE SHALL BE A MINIMUM OF TWO TIMES THE AGGREGATE DIAMETER OF ALL PIPES CONTAINED WITH SLEEVE. PROVIDE VERTICAL SWEEP FOR ALL ELECTRICAL CONDUIT ON EACH SIDE OF HARDSCAPE AND TERMINATE ENDS AT 12" MINIMUM DEPTH AND 12" FROM HARDSCAPE SURFACE.
3. UNSIZED LATERAL LINE PIPING LOCATED DOWN STREAM OF 1" PIPING SHALL BE 3/4" IN SIZE (TYPICAL).
4. SIZING OF LATERAL PIPE SHALL BE AS FOLLOWS:

0.75"	0–6 GPM
1"	7–12 GPM
1.25"	21–32 GPM
1.5"	21–32 GPM

5. SIZING OF LATERAL PIPE FOR DRIPLINE (12" O.C. GRID WITH 0.6 GPH OR LESS EMITTERS) SHALL BE AS FOLLOWS:

0.75	0–500 FT
1"	501–1100 FT
1.25"	1101–2000 FT

6. SIZING OF LATERAL PIPE FOR DRIPLINE (18" O.C. GRID WITH 0.6 GPH OR LESS EMITTERS) SHALL BE AS FOLLOW:

0.75"	0–1100 FT
1"	1101–2200 FT
1.25"	2201–3600 FT

Irrigation Consultant:
Russell D. Mitchell Associates, Inc.
2760 Camino Diablo
Walnut Creek, CA 94597
tel 925.939.3985 ♦ fax 925.932.5671
www.rmairrigation.com

GROUP 4
ARCHITECTURE RESEARCH + PLANNING, INC
211 LINDEN AVENUE
SO. SAN FRANCISCO
CA 94080 USA
650·871·0709

rhaa
LANDSCAPE ARCHITECTURE + PLANNING
323 Geary Street, Suite 602, San Francisco, CA 94102
T 415 861 7900 F 415 861 7908 www.rhaa.com

THE CITY OF BURLINGAME CALIFORNIA INCORPORATED 1908

WASHINGTON PARK PLAYGROUND, SPORTS COURT, AND PICNIC AREA

850 BURLINGAME AVE
BURLINGAME
CA 94010

LICENSED LANDSCAPE ARCHITECT
Registered Lincoln Ho
Signature
04/30/19
Renewal Date
03/25/19
Date
STATE OF CALIFORNIA

Project Arch.	----
CA REG.	----
PROJECT:	12421-04

ISSUE	DATE
SD SUBMITTAL	11/02/18
BID SET	03/25/19

SHEET TITLE AND NO.
IRRIGATION PLAN

L6.2

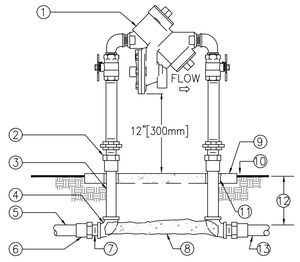

1. REDUCED PRESSURE BACKFLOW ASSEMBLY. RE-USE EXISTING, CONFIRM WITH CITY.
2. WROUGHT COPPER MALE ADAPTER-2 TOTAL (SOLDER x THREAD CONNECTION).
3. COPPER TYPE "K" PIPE (LENGTH AS REQUIRED).
4. WROUGHT COPPER 90° ELBOW-2 TOTAL (SOLDER x THREAD CONNECTION).
5. PVC MAIN LINE TO POINT OF CONNECTION.
6. BUSH AS NECESSARY FOR SIZE TRANSITION.
7. SCHEDULE 40 PVC MALE ADAPTER-2 TOTAL.
8. CONCRETE SUPPORT BLOCK.
9. CONCRETE PAD-SEE ENCLOSURE DETAIL.
10. FINISH GRADE.
11. PVC SLEEVE BOTH SIDES.
12. REFER TO IRRIGATION LEGEND.
13. PVC MAIN LINE TO IRRIGATION SYSTEM.

NOTES:
1. INSTALL A FREEZE PREVENTATIVE BLANKET AROUND BACKFLOW ASSEMBLY. BLANKET SHALL BE GREEN.
2. DO NOT SOLDER CONNECT FITTINGS WHILE THREADED INTO BACKFLOW ASSEMBLY. THIS MAY CAUSE DAMAGE TO DEVICE.
3. NIPPLES AND FITTINGS TO BE SAME IPT SIZE AS BACKFLOW ASSEMBLY.
4. PROVIDE A STAINLESS STEEL ENCLOSURE TO COMPLETELY ENCLOSE DEVICE. INSTALL ENCLOSURE TO CONCRETE BASE AS DIRECTED BY MANUFACTURER.

1 REDUCED PRESSURE BACKFLOW ASSEMBLY
SCALE: NONE

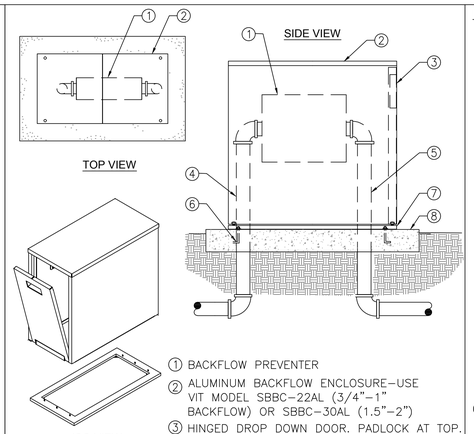

1. BACKFLOW PREVENTER
2. ALUMINUM BACKFLOW ENCLOSURE-USE VIT MODEL SBBC-22AL (3/4"-1" BACKFLOW) OR SBBC-30AL (1.5"-2")
3. HINGED DROP DOWN DOOR. PADLOCK AT TOP.
4. WATER SERVICE INLET PIPING
5. WATER SERVICE OUTLET PIPING
6. 3/8" "L" STYLE ANCHOR BOLTS SET IN CONCRETE BASE
7. SECURED ANCHOR PLATE MOUNTING BASE IN CONCRETE WITH 3#8" J BOLTS (4 PLACES).
8. POURED CONCRETE BASE - 6" MIN. THICKNESS - EXTEND 4" BEYOND OUTSIDE DIMENSIONS OF ENCLOSURE

2 ALUMINUM BACKFLOW ENCLOSURE-LOW PROFILE
SCALE: NONE

NOTES: 1. DIMENSION 'A'-SEE BELOW FOR PIPE LENGTHS OF STRAIGHT RUNS WITH NO VALVES, REDUCERS OR ELBOWS.
- A. 6" DIAMETER PIPE = 60 LINEAR INCHES (MINIMUM).
- B. 4" DIAMETER PIPE = 40 LINEAR INCHES (MINIMUM).
- C. 3" DIAMETER PIPE = 30 LINEAR INCHES (MINIMUM).
- D. 2" DIAMETER PIPE = 20 LINEAR INCHES (MINIMUM).
- E. 1" DIAMETER PIPE = 10 LINEAR INCHES (MINIMUM).

2. DIMENSION 'B'-SEE BELOW FOR PIPE LENGTHS OF STRAIGHT RUNS WITH NO VALVES, REDUCERS OR ELBOWS.
- A. 6" DIAMETER PIPE = 30 LINEAR INCHES (MINIMUM).
- B. 4" DIAMETER PIPE = 20 LINEAR INCHES (MINIMUM).
- C. 3" DIAMETER PIPE = 15 LINEAR INCHES (MINIMUM).
- D. 2" DIAMETER PIPE = 10 LINEAR INCHES (MINIMUM).
- E. 1" DIAMETER PIPE = 5 LINEAR INCHES (MINIMUM).

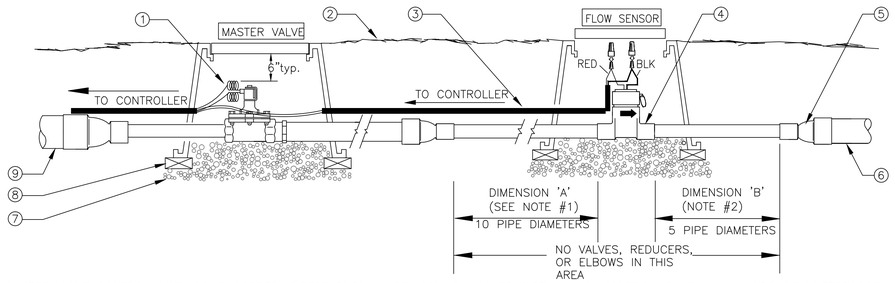

1. MASTER VALVE CONTROL WIRE: SOLID COPPER, DIRECT BURIAL WIRE. COMMON: WHITE WIRE #14-1, CONTROL: BLUE #14-1. PROVIDE WATERPROOF SPLICES AND 36" OF EXCESS WIRE IN A 1" DIAMETER COIL. ROUTE WIRE WITHIN 1.5" CONDUIT WITH FLOW SENSOR WIRES.
2. FINISH GRADE
3. FLOW SENSOR WIRE SHALL BE #14-1 AWG DIRECT BURIAL WIRE (1 RED, 1 BLACK). FLOW SENSOR WIRE MUST BE RUN IN 1 1/2" PVC CONDUIT FROM FLOW SENSOR TO CONTROLLER ENCLOSURE.
4. FLOW SENSOR MUST BE INSTALLED WITH INSERT (TOP) POSITIONED VERTICALLY AND BODY (TEE) POSITIONED HORIZONTALLY.
5. SCHEDULE 80 REDUCING COUPLING (TYPICAL).
6. MAIN LINE PIPE TO REMOTE CONTROL VALVES AND QUICK COUPLING VALVES.
7. PEA GRAVEL-4" DEEP BELOW VALVE. NO SOIL ALLOWED IN VALVE BOX (TYPICAL).
8. BRICK, PROVIDE 1 BRICK AT EACH CORNER OF VALVE BOX (TYPICAL).
9. MAIN LINE PIPE FROM BACKFLOW.

3 CALSENSE FLOW SENSOR & MASTER VALVE INSTALLATION

NOTES:
1. UNIT IS TO BE ASSEMBLED, WIRED, AND TESTED BY A MANUFACTURER TRAINED VENDOR.

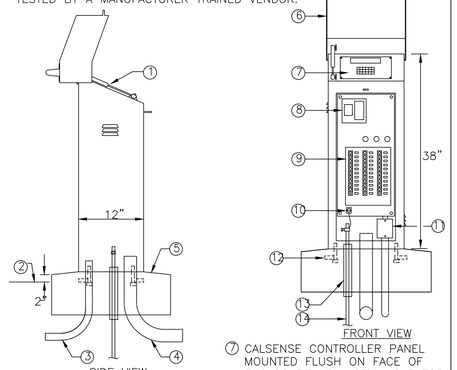

1. PISTON CONNECTED TO FLIP TOP
2. FINISH GRADE
3. SCH 40 ELECTRICAL SWEEP ELL FOR 120 VAC POWER
4. SCH 40 ELECTRICAL SWEEP ELL FOR LOW VOLTAGE CONTROL WIRES AND COMMUNICATION WIRES
5. 26"X24"X8" CONCRETE BASE INSTALL LEVEL. PROVIDE SLOPE TO TOP OF SLAB SURFACE FOR DRAINAGE.
6. FLIP TOP IN OPEN POSITION
7. CALSENSE CONTROLLER PANEL MOUNTED FLUSH ON FACE OF ENCLOSURE AT A 25° ANGLE FOR EASY ACCESS AND VIEWING
8. GFI OUTLET & SWITCH
9. CALSENSE TP-1 TRANSIENT PROTECTION BOARD
10. #6 AWG GROUNDING WIRE CONNECTED TO GROUND LUG
11. 120 VAC JUNCTION BOX (INCLUDED WITH ENCLOSURE)
12. MOUNTING BOLTS (BOLTS & TEMPLATE INCLUDED WITH ENCLOSURE)
13. PVC SLEEVE FOR GROUND ROD
14. 5/8"X8' COPPER GROUNDING ROD

4 CALSENSE TOP ENTRY CONTROLLER
SCALE: NONE

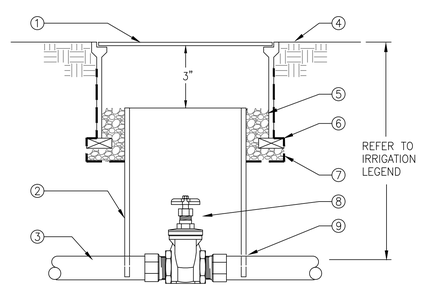

1. 10" ROUND PLASTIC VALVE BOX WITH BOLT DOWN LID.
2. 8" CLASS 160 OR SCHEDULE 40 PVC PIPE (NOTCH TO FIT OVER MAIN LINE PIPE).
3. PVC MAIN LINE.
4. FINISH GRADE.
5. PEA GRAVEL OR 3/4" DRAIN ROCK - 4" DEEP (NO SOIL IN VALVE BOX).
6. BRICK-2 TOTAL.
7. 19 GAUGE 1/2" SQUARE WIRE MESH. WRAP UP SIDES OF BOX.
8. GATE VALVE WITH X-TOP HANDLE.
9. MALE ADAPTER. REFER TO LEGEND FOR FITTING TYPE.

5 GATE VALVE
SCALE: NONE

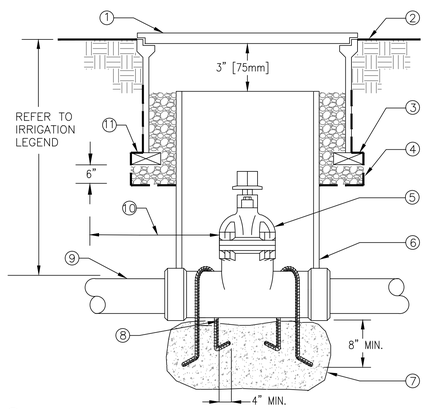

1. 10" ROUND PLASTIC VALVE BOX WITH BOLT DOWN T-LID.
2. FINISH GRADE.
3. BRICK-2 TOTAL.
4. PEA GRAVEL OR 3/4" DRAIN ROCK - 4" DEEP BELOW VALVE (NO SOIL IN VALVE BOX).
5. GATE VALVE WITH 2" OPERATING NUT.
6. 6" PVC PIPE. CUT OUT AROUND PIPE.
7. CONCRETE THRUST BLOCK - 18" CUBE.
8. #4 REBAR-BEND OVER VALVE BODY BEND EACH END.
9. PVC MAIN LINE.
10. PROVIDE A MINIMUM OF 10' BETWEEN GATE VALVE AND MAIN LINE TEE OR ELBOW.
11. 19 GAUGE 1/2" SQUARE WIRE MESH. WRAP UP SIDE OF BOX.

6 GATE VALVE - 4"
SCALE: NONE

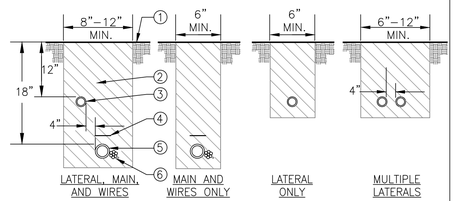

NOTES:
1. ALL MAIN SUPPLY LINES AND LATERAL LINES SHALL BE PLACED IN SLEEVES UNDER PAVED SURFACES. INSTALL LOW VOLTAGE WIRES WITHIN A SEPARATE CONDUIT UNDER PAVED SURFACES. DO NOT TAPE WIRES WITHIN CONDUIT.
2. REUSE SALVAGED EXCAVATED FILL AND COMPACT TO ORIGINAL DENSITY IN LANDSCAPE AREAS. ALL OTHER AREAS SHALL BE AT 95% COMPACTION. BACKFILL MATERIAL SHALL BE THE EARTH EXCAVATED FROM THE TRENCHES, FREE FROM ROCKS (ANYTHING LARGER THAN 2"), CONCRETE CHUNKS, AND OTHER FOREIGN OR COARSE MATERIALS.
3. WHEN 12" POP-UP SPRINKLER HEADS ARE USED, INCREASE THE DEPTH OF LATERAL TO 18" AT THE SPRINKLER LOCATION ONLY.

1. FINISH GRADE.
2. CLEAN BACKFILL MATERIAL.
3. LATERAL LINE.
4. 3" DETECTABLE WARNING TAPE OVER MAIN LINE. INSTALL 3" ABOVE MAIN LINE. USE CHRISTY MODEL #TA-DT-3-BIRR FOR POTABLE IRRIGATION SYSTEMS OR #TA-DT-3-PRW FOR RECYCLED IRRIGATION WATER SYSTEMS
6. MAIN LINE.
7. LOW VOLTAGE CONTROL WIRES, TWO-WIRE CABLE, OR CONDUIT WITH WIRES. FOR MULTIPLE WIRES, TAPE AND BUNDLE WIRES AT 10 FT. INTERVALS. WIRING SHALL BE LAID OUT LOOSELY IN THE TRENCH.

7 TRENCHING
SCALE: NONE

GROUP 4
ARCHITECTURE
RESEARCH +
PLANNING, INC
211 LINDEN AVENUE
SO. SAN FRANCISCO
CA 94080 USA
650 871 0709

rhaa
LANDSCAPE ARCHITECTURE + PLANNING
323 Geary Street, Suite 402, San Francisco, CA 94102
T 415 861 7900 F 415 861 7908 www.rhaa.com

WASHINGTON PARK PLAYGROUND, SPORTS COURT, AND PICNIC AREA

850 BURLINGAME AVE BURLINGAME CA 94010

LICENSED LANDSCAPE ARCHITECT
Christopher Lincoln Taylor
Signature
04/30/19
Renewal Date
05/25/19
Date
STATE OF CALIFORNIA

Project Arch.	----
CA REG.	----
PROJECT:	12421-04

ISSUE	DATE
SD SUBMITTAL	11/02/18
BID SET	03/25/19

SHEET TITLE AND NO.
IRRIGATION DETAILS

L6.3

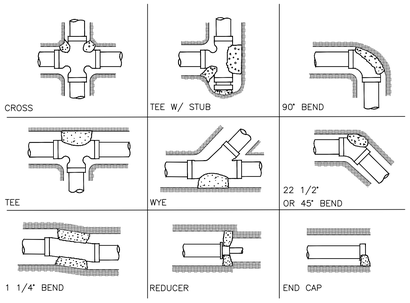

1. CONCRETE THRUST BLOCK SHALL HAVE CONTACT WITH FITTING ONLY AND REMAIN CLEAR OF PIPE AND JOINTS.
2. THRUST BLOCK TO BE CONSTRUCTED OF 3000 PSI CONCRETE.
3. BLOCK TO BE POURED AGAINST UNDISTURBED SOIL.

1 THRUST BLOCK
SCALE: NONE

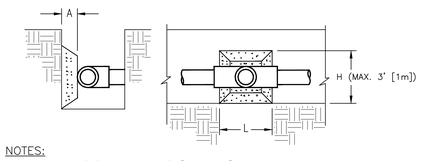

NOTES:
1. DISTANCE "A" TO BE 18" [450mm] MINIMUM FROM FITTING TO UNDISTURBED SOIL. THRUST BLOCKS SHALL BE POURED ONLY AGAINST UNDISTURBED EARTH.
2. REFER TO THRUST BLOCK CHART FOR DISTANCE "L" AND "H".
3. CONCRETE TO BE SHAPED INTO A WEDGE WITH THE WIDE END AGAINST THE SOLID WALL OF THE TRENCH.
4. THRUST BLOCKING APPLIES TO 3" [75mm] AND LARGER PIPE ONLY.
5. CONCRETE SHALL BE KEPT BEHIND THE BELL OF THE FITTING WITH THE CONCRETE NOT PERMITTED TO RUN OVER AGAINST THE PIPE OR ONTO THE JOINT.

PIPE SIZE	90° BEND		45° BEND		TEES,DEADENDS &VALVES	
	BEARING AREA (SQUARE FT.)	L x H	BEARING AREA (SQUARE FT.)	L x H	BEARING AREA (SQUARE FT.)	L x H
3"	1.0	13"x13"	.57	10"x10"	.74	11"x11"
4"	1.7	16"x16"	.93	12"x12"	1.2	14"x14"
6"	3.7	23"x23"	2.0	17"x17"	2.6	20"X20"

THE FIGURES IN THIS CHART ARE BASED ON A WORKING PRESSURE OF 150 PSI.

2 THRUST BLOCK INSTALLATION
SCALE: NONE

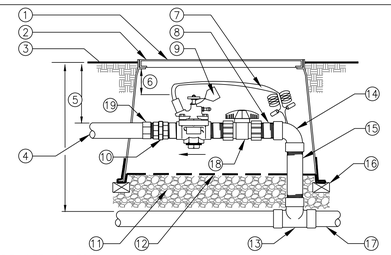

1. REMOTE CONTROL VALVE WITH FLOW CONTROL AND MANUAL BLEED (PRESSURE REGULATOR WHERE SHOWN ON PLANS).
2. USE A NDS PRO SERIES 14" X 19" RECTANGULAR PLASTIC VALVE BOX WITH BOLT DOWN LID FOR 1" VALVES. FOR 1.5" AND LARGER VALVES INSTALL BALL VALVE WITHIN A SEPARATE 10" ROUND BOX OR ONE BALL VALVE PER MANIFOLD OF VALVES. GATE VALVE SIZE SHALL BE SAME AS LARGEST VALVE WITHIN MANIFOLD. ONE VALVE PER BOX– NO EXCEPTIONS. INSTALL BOX AS SHOWN IN BOX INSTALLATION DETAIL.
3. FINISH GRADE.
4. PVC LATERAL LINE.
5. REFER TO IRRIGATION SPECS.
6. 3" [75mm] MIN, 6" [150mm] MAX.
7. VALVE CONTROL WIRE– PROVIDE SEAL PACKS AT ALL SPLICES AND 3' [1m] OF EXCESS UF WIRE IN A 1" [25mm] DIAMETER COIL.
8. SCHEDULE 80 PVC NIPPLE (3 TOTAL).
9. VALVE I.D. TAG (CONTROLLER AND STATION NUMBER).
10. SCHEDULE 80 PVC THREADED UNION.
11. PEA GRAVEL OR 3/4" DRAIN ROCK– 4" [100mm] DEEP BELOW VALVE (NO SOIL IN VALVE BOX).
12. 19 GAUGE 1/2" [12mm] SQUARE WIRE MESH.
13. SCHEDULE 40 OR 80 PVC TEE. REFER TO LEGEND FOR TYPE.
14. SCHEDULE 80 PVC 90° ELBOW (TxT).
15. SCHEDULE 80 PVC NIPPLE– LENGTH AS REQUIRED.
16. BRICK–1 EACH CORNER.
17. PVC MAIN LINE.
18. SCHEDULE 80 PVC UNION BALL VALVE (ONE PER VALVE).
19. SCHEDULE 40 MALE ADAPTER

3 REMOTE CONTROL VALVE
SCALE: NONE

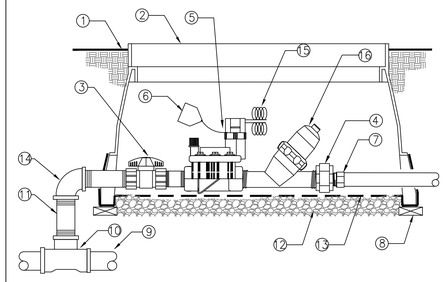

1. FINISH GRADE
2. RECTANGULAR JUMBO PLASTIC VALVE BOX WITH BOLT DOWN LID. ONE VALVE PER BOX– NO EXCEPTIONS. INSTALL BOX AS SHOWN IN BOX INSTALLATION DETAIL.
3. SCHEDULE 80 PVC UNION BALL VALVE (ONE PER VALVE)
4. SCHEDULE 80 PVC THREADED UNION
5. REMOTE CONTROL VALVE WITH PRESSURE REGULATOR.
6. VALVE I.D. TAG (CONTROLLER AND STATION NUMBER).
7. SCHEDULE 40 MALE ADAPTER
8. BRICK–1 EACH CORNER.
9. PVC MAIN LINE.
10. SCHEDULE 40 OR 80 PVC TEE. REFER TO LEGEND FOR TYPE.
11. SCHEDULE 80 PVC NIPPLE–(4–TOTAL) LENGTH AS REQUIRED.
12. PEA GRAVEL OR 3/4" [20mm] DRAIN ROCK – 4" [102mm] DEEP BELOW VALVE (NO SOIL IN VALVE BOX).
13. 19 GAUGE 1/2" [13mm] SQUARE WIRE MESH.
14. SCHEDULE 80 PVC 90° ELBOW (TxT).
15. VALVE CONTROL WIRE– PROVIDE 3M–DBY SEAL PACKS AT ALL SPLICES AND 3' [1m] OF EXCESS UF WIRE IN A 1" [25mm] DIAMETER COIL.
16. DISC FILTER

4 REMOTE CONTROL VALVE (DRIPZONE)
SCALE: NONE

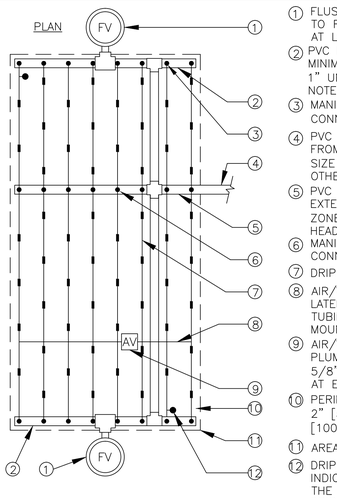

1. FLUSH VALVE PLUMBED TO FLUSH MANIFOLD AT LOW POINT
2. PVC FLUSH MANIFOLD. MINIMUM SIZE TO BE 1" UNLESS OTHERWISE NOTED.
3. MANIFOLD–TO–ELBOW CONNECTION (TYP).
4. PVC LATERAL LINE FROM VALVE. MINIMUM SIZE TO BE 1" UNLESS OTHERWISE NOTED.
5. PVC SUPPLY MANIFOLD. EXTEND TO END OF ZONE/EXHAUST HEADER.
6. MANIFOLD–TO–TEE CONNECTION.
7. DRIPLINE LATERAL.
8. AIR/VACUUM RELIEF LATERAL, BLANK POLY TUBING CENTERED ON MOUND OR BERM.
9. AIR/VACUUM RELIEF PLUMBED TO BLANK 5/8" POLY TUBING AT EACH HIGH POINT.
10. PERIMETER LATERALS 2" [50mm] TO 4" [100mm] FROM EDGE.
11. AREA PERIMETER.
12. DRIPLINE OPERATION INDICATOR LOCATED AT THE ENDS OF EACH DRIPLINE ZONE.

NOTE:
1. THE TOTAL LENGTH OF ALL INTERCONNECTED DRIP LINE OFF A SINGLE PVC SUPPLY LINE CONNECTION OR A SINGLE RUN OF DRIPLINE SHALL NOT EXCEED 300 FT.
2. INSTALL DRIPLINE 2–4" BELOW GRADE AND STAKE DOWN EVERY 4' OR AS REQUIRED.

5 HUNTER HDL CENTER FEED LAYOUT
SCALE: NONE

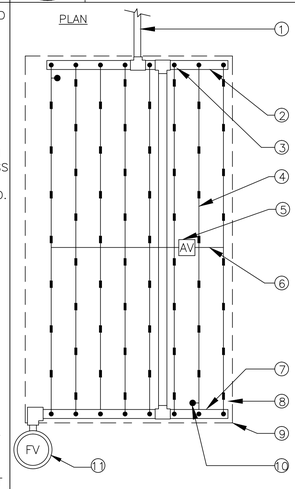

1. PVC LATERAL LINE FROM VALVE. MINIMUM SIZE TO BE 1" UNLESS OTHERWISE NOTED.
2. PVC FLUSH MANIFOLD. MINIMUM SIZE TO BE 1" UNLESS OTHERWISE NOTED.
3. MANIFOLD–TO–ELBOW CONNECTION (TYP).
4. DRIPLINE LATERAL.
5. AIR/VACUUM RELIEF VALVE PLUMBED TO BLANK 5/8" TUBING AT EACH HIGH POINT.
6. AIR/VACUUM RELIEF LATERAL, BLANK 5/8" POLY TUBING CENTERED ON MOUND OR BERM.
7. PVC FLUSH MANIFOLD. MINIMUM SIZE TO BE 1" UNLESS OTHERWISE NOTED.
8. PERIMETER LATERALS 2" [50mm] TO 4" [100mm] FROM EDGE.
9. AREA PERIMETER.
10. DRIP OPERATION INDICATOR LOCATED AT THE ENDS OF EACH DRIPLINE ZONES.
11. AUTOMATIC FLUSH VALVE PLUMBED TO FLUSH MANIFOLD AT LOW POINT.

NOTE:
1. THE TOTAL LENGTH OF ALL INTERCONNECTED DRIP LINE OFF A SINGLE PVC SUPPLY LINE CONNECTION OR A SINGLE RUN OF DRIPLINE SHALL NOT EXCEED 300 FT.
2. INSTALL DRIPLINE 2–4" BELOW GRADE AND STAKE DOWN EVERY 4' OR AS REQUIRED.

6 HUNTER HDL END FEED LAYOUT
SCALE: NONE

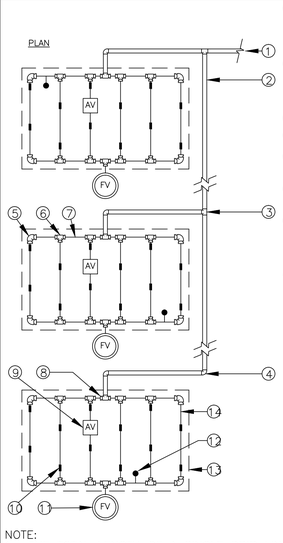

1. PVC LATERAL LINE FROM VALVE. MINIMUM SIZE TO BE 1" UNLESS OTHERWISE NOTED.
2. PVC FLUSH MANIFOLD. MINIMUM SIZE TO BE 1" UNLESS OTHERWISE NOTED.
3. PVC TEE (SxSxS).
4. PVC ELL (SxS).
5. HUNTER PLD LOC ELBOW PLD–LOC–ELB.
6. HUNTER PLD LOC TEE (PLD–LOC TEE).
7. BLANK 5/8" [16mm] POLY TUBING AT SUPPLY AND FLUSH END OF EACH ISLAND.
8. REFER TO DRIPLINE TO PVC CONNECTION DETAIL.
9. AIR/VACUUM RELIEF VALVE PLUMBED TO TUBING AT HIGH POINT.
10. DRIPLINE LATERAL.
11. MANUAL FLUSH VALVE PLUMBED TO TUBING AT LOW POINT.
12. DRIPLINE OPERATION INDICATOR LOCATED AT THE ENDS OF EACH DRIPLINE ZONE.
13. ISLAND PERIMETER.
14. PERIMETER LATERALS 2" [50mm] TO 4" [100mm] FROM EDGE.

NOTE:
1. THE TOTAL LENGTH OF A SINGLE DRIP LINE RUN SHALL NOT EXCEED 300 FT.
2. INSTALL DRIPLINE 2–4" BELOW GRADE AND STAKE DOWN EVERY 4' OR AS REQUIRED.

7 HUNTER HDL ISLAND LAYOUT
SCALE: NONE

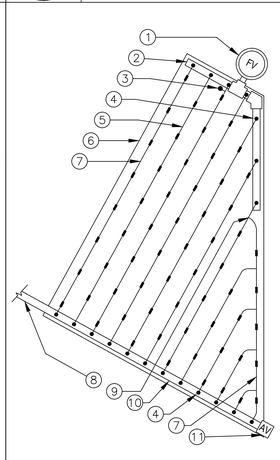

1. FLUSH VALVE PLUMBED TO FLUSH MANIFOLD AT LOW POINT
2. PVC FLUSH MANIFOLD. MINIMUM SIZE TO BE 1" UNLESS OTHERWISE NOTED.
3. DRIPLINE OPERATION INDICATOR LOCATED AT THE ENDS OF EACH DRIPLINE ZONE.
4. MANIFOLD–TO–ELBOW CONNECTION.
5. DRIPLINE LATERAL.
6. AREA PERIMETER.
7. PERIMETER LATERALS 2" [50mm] TO 4" [100mm] FROM EDGE.
8. PVC LATERAL LINE FROM VALVE. MINIMUM SIZE TO BE 1" UNLESS OTHERWISE NOTED.
9. HUNTER PLD LOC TEE (PLD–LOC TEE).
10. PVC SUPPLY MANIFOLD.
11. HUNTER PLD AIR/VACUUM RELIEF VALVE (PLD–ARV) PLUMBED TO SUPPLY MANIFOLD AT HIGH POINT.

NOTE:
1. THE TOTAL LENGTH OF ALL INTERCONNECTED DRIP LINE OFF A SINGLE PVC SUPPLY LINE CONNECTION OR A SINGLE RUN OF DRIPLINE SHALL NOT EXCEED 300 FT.
2. INSTALL DRIPLINE 2–4" BELOW GRADE AND STAKE DOWN EVERY 4' OR AS REQUIRED.

8 HUNTER HDL TRIANGULAR LAYOUT
SCALE: NONE

GROUP 4
ARCHITECTURE
RESEARCH +
PLANNING, INC
211 LINDEN AVENUE
SO. SAN FRANCISCO
CA 94080 USA
650 871 0709

rhaa
LANDSCAPE ARCHITECTURE + PLANNING
303 Geary Street, Suite 402, San Francisco, CA 94102
T 415 861 7900 F 415 861 7908 www.rhaa.com

WASHINGTON PARK PLAYGROUND, SPORTS COURT, AND PICNIC AREA

850 BURLINGAME AVE BURLINGAME CA 94010

LICENSED LANDSCAPE ARCHITECT
Signature
06/30/19
Renewal Date
03/25/19
Date
STATE OF CALIFORNIA

Project Arch.	----
CA REG.	----
PROJECT:	12421-04

ISSUE	DATE
SD SUBMITTAL	11/02/18
BID SET	03/25/19

SHEET TITLE AND NO.
IRRIGATION DETAILS

L6.4

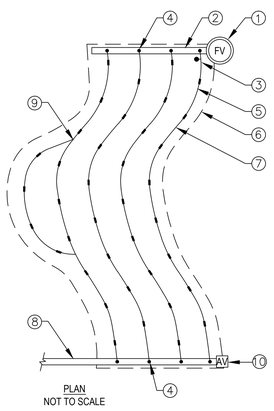

PLAN
NOT TO SCALE

1. FLUSH VALVE PLUMBED TO FLUSH MANIFOLD AT LOW POINT
2. PVC FLUSH MANIFOLD. MINIMUM SIZE TO BE 1" UNLESS OTHERWISE NOTED.
3. DRIPLINE OPERATION INDICATOR LOCATED AT THE ENDS OF EACH DRIPLINE ZONE.
4. MANIFOLD–TO–ELBOW CONNECTION.
5. DRIPLINE LATERAL.
6. AREA PERIMETER.
7. PERIMETER LATERALS 2" [50mm] TO 4" [100mm] FROM EDGE.
8. PVC SUPPLY LINE/HEADER FROM VALVE. MINIMUM SIZE TO BE 1" UNLESS OTHERWISE NOTED.
9. HUNTER PLD LOC TEE (PLD–LOC TEE).
10. HUNTER PLD AIR/VACUUM RELIEF VALVE (PLD–ARV) PLUMBED TO SUPPLY MANIFOLD AT HIGH POINT.

NOTE:
1. THE TOTAL LENGTH OF ALL INTERCONNECTED DRIP LINE OFF A SINGLE PVC SUPPLY LINE CONNECTION OR A SINGLE RUN OF DRIPLINE SHALL NOT EXCEED 300 FT.
2. INSTALL DRIPLINE 2–4" BELOW GRADE AND STAKE DOWN EVERY 4' OR AS REQUIRED.

1 HUNTER HDL ODD CURVE LAYOUT
SCALE: NONE

ISOMETRIC

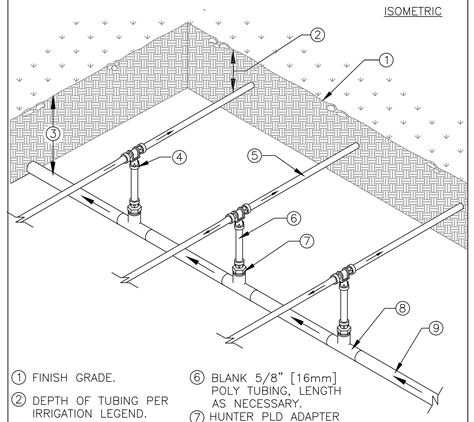

1. FINISH GRADE.
2. DEPTH OF TUBING PER IRRIGATION LEGEND.
3. DEPTH OF PVC LATERAL LINE PER IRRIGATION LEGEND
4. HUNTER PLD LOC TEE (PLD–LOC TEE).
5. DRIPLINE TUBING.
6. BLANK 5/8" [16mm] POLY TUBING, LENGTH AS NECESSARY.
7. HUNTER PLD ADAPTER
8. PVC TEE (SxSxT) WITH 1/2" [13mm] FPT OUTLET.
9. PVC LATERAL LINE FROM REMOTE CONTROL VALVE.

NOTE:
THE TOTAL LENGTH OF A SINGLE DRIP LINE RUN SHALL NOT EXCEED 300 FT.

2 HUNTER HDL CENTER FEED MANIFOLD
SCALE: NONE

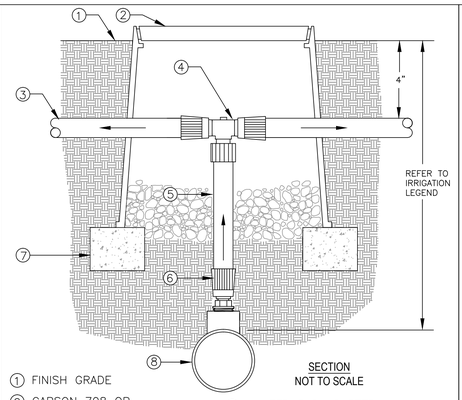

SECTION
NOT TO SCALE

1. FINISH GRADE
2. CARSON 708 OR EQUAL. COLOR: BLACK. USE PURPLE FOR RECYCLED WATER SYSTEMS.
3. DRIPLINE TUBING
4. HUNTER PLD–LOC TEE
5. BLANK 5/8" [16mm] POLY TUBING, LENGTH AS NECESSARY.
6. HUNTER PLD ADAPTER
7. BRICK (1 OF 2)
8. SCH 40 PVC TEE (SxSxT) WITH 1/2" FPT OUTLET.
8. PVC LATERAL LINE SUPPLY. MINIMUM SIZE TO BE 1" UNLESS SIZED DIFFERENTLY ON DRAWINGS. USE SCH 40 PVC 1"x1"x1/2" TEE OR 90° ELBOW.

NOTE:
USE ONLY WHEN THE TOTAL LENGTH OF DRIP LINE SERVICED FROM THIS PVC CONNECTION IS LESS THAN 300 FT.

3 DRIPLINE TO PVC CONNECTION–SINGLE SOURCE DRIP AREAS ONLY
SCALE: NONE

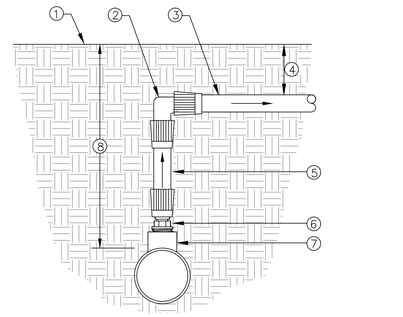

SECTION/ELEVATION
NOT TO SCALE

1. FINISH GRADE
2. HUNTER PLD LOC ELBOW PLD–LOC–ELB.
3. DRIPLINE TUBING
4. DEPTH OF TUBING PER IRRIGATION LEGEND.
5. BLANK 5/8" [16mm] POLY TUBING, LENGTH AS NECESSARY.
6. TORO PLD ADAPTER
7. SCH 40 PVC TEE (SxSxT) WITH 1/2" FPT OUTLET.
8. DEPTH OF PVC LATERAL LINE PER IRRIGATION LEGEND

4 DRIPLINE MANIFOLD TO ELBOW CONNECTION
SCALE: NONE

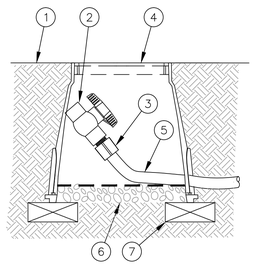

NOTE:
ALLOW A 12" MINIMUM OF PVC HOSE IN VALVE BOX IN ORDER TO DIRECT FLUSHED WATER OUTSIDE VALVE BOX.

1. FINISH GRADE
2. 1/2" SCH 40 THREADED BALL VALVE.
3. 1/2" SCH 40 MALE ADAPTER.
4. 6" ROUND PLASTIC VALVE BOX.
5. 1" IPS PVC HOSE FROM EXHAUST HEADER OR BLANK DRIP TUBING.
6. PEA GRAVEL SUMP (6" DEEP).
7. BRICK (1 OF 2)

5 DRIPLINE–FLUSH POINT
SCALE: NONE

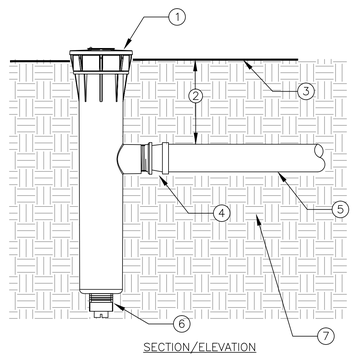

SECTION/ELEVATION

1. HUNTER 6" POP UP SPRINKLER WITH SIDE INLET (MODEL PROS–06 WITH 4' NOZZLE (MODEL 4A) TURNED COMPLETELY OFF WITH ADJUSTMENT SCREW. SPRINKLER SHALL OPERATE AS THE DRIPLINE INDICATOR. USE A MINIMUM OF ONE PER ZONE AND LOCATED AT END OF ZONE.
2. DEPTH OF DRIPLINE. REFER TO IRRIGATION LEGEND.
3. FINISH GRADE.
4. HUNTER PLD FITTING WITH 1/2" MALE ADAPTER (MODEL PLD–050)
5. DRIPLINE.
6. KEEP PLUG IN SPRINKLER. ONLY USE SIDE INLET.
7. SOIL BACKFILL.

6 DRIPLINE OPERATION INDICATOR
SCALE: NONE

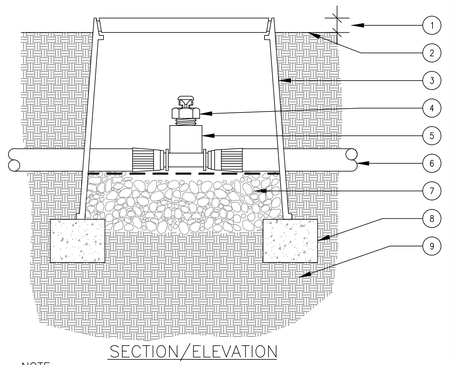

SECTION/ELEVATION

NOTE:
USE ONE AIR/RELIEF VALVE FOR EVERY 7 GPM PER ZONE. LOCATE AT HIGH POINTS.

1. 1" ABOVE FINISH GRADE.
2. FINISH GRADE.
3. 6" ROUND PLASTIC VALVE BOX. HEAT BRAND "AR" ON LID IN 1" HIGH CHARACTERS.
4. HUNTER PLD AIR/VACUUM RELIEF VALVE (PLD ARV).
5. HUNTER PLD–LOC TEE X 1/2" FPT ADAPTER
6. HUNTER HDL TUBING/ AIR–RELIEF LATERAL.
7. PEA GRAVEL (4" DEEP).
8. BRICK SUPPORTS (2 COMMON BRICKS REQUIRED).
9. NATIVE SOIL PER SPECIFICATIONS.

7 AIR VACUUM RELIEF VALVE IN DRIPLINE
SCALE: NONE

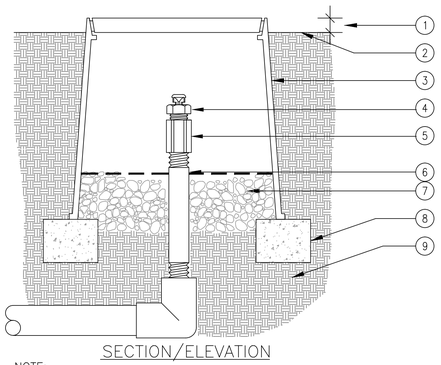

SECTION/ELEVATION

NOTE:
USE ONE AIR/RELIEF VALVE FOR EVERY 7 GPM PER ZONE. LOCATE AT HIGH POINTS.

1. 1" ABOVE FINISH GRADE.
2. FINISH GRADE.
3. 6" ROUND PLASTIC VALVE BOX. HEAT BRAND "AR" ON LID IN 1" HIGH CHARACTERS.
4. HUNTER AIR/VACUUM RELIEF VALVE (PLD ARV).
5. 1/2" SCH 40 PVC COUPLING (TxT)
6. 1/2" SCH 80 PVC NIPPLE (LENGTH AS REQUIRED).
7. PEA GRAVEL (4" DEEP).
8. BRICK SUPPORTS (2 COMMON BRICKS REQUIRED).
9. NATIVE SOIL PER SPECIFICATIONS.

8 AIR VACUUM RELIEF VALVE ON PVC ELL
SCALE: NONE

GROUP 4
ARCHITECTURE
RESEARCH +
PLANNING, INC
211 LINDEN AVENUE
SO. SAN FRANCISCO
CA 94080 USA
650 871 0709

rhaa
LANDSCAPE ARCHITECTURE + PLANNING
323 Geary Street, Suite 402, San Francisco, CA 94102
T 415 861 7900 F 415 861 7908 www.rhaa.com

WASHINGTON PARK PLAYGROUND, SPORTS COURT, AND PICNIC AREA

850 BURLINGAME AVE
BURLINGAME
CA 94010

LICENSED LANDSCAPE ARCHITECT
Signature
04/26/19
Renewal Date
03/25/19
Date
STATE OF CALIFORNIA

Project Arch.	----
CA REG.	----
PROJECT:	12421-04

ISSUE	DATE
SD SUBMITTAL	11/02/18
BID SET	03/25/19

SHEET TITLE AND NO.
IRRIGATION DETAILS

L6.5

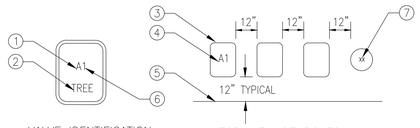

VALVE IDENTIFICATION

1. CONTROLLER ID.
2. ALL TREE VALVES TO HAVE TREE BRANDED INTO LID.
3. RECTANGULAR VALVE BOX.
4. HEAT BRAND VALVE TYPE PER TABLE OR CONTROLLER ID AND STATION NUMBER INTO LID.
5. EDGE OF LAWN, WALK, FENCE, CURB, ETC.
6. STATION NUMBER.
7. ROUND VALVE BOX FOR QCV AND GATE VALVE. HEAT BRAND VALVE TYPE INTO INTO LID PER TABLE.

TOP VIEW OF BOXES

ITEMS TO BRAND:	BRAND CODE
GATE VALVE	GV
PRESSURE REDUCER	PRV
MASTER VALVE	MV
FLOW SENSOR	FS
HYDROMETER	HM
MAIN LINE AIR RELIEF	ARV
REMOTE CONTROL VALVE	A___
QUICK COUPLER	QC
SPLICE BOX	SB
PULL BOX	PB
LIGHTNING ARRESTOR	LA
GROUND ROD	GR

INSTRUCTIONS:

1. CENTER VALVE BOX OVER REMOTE CONTROL VALVE TO FACILITATE SERVICING VALVE.
2. SET BOXES 1" ABOVE FINISH GRADE OR MULCH COVER IN GROUND COVER/SHRUB AREA AND FLUSH WITH FINISH GRADE IN TURF AREA.
3. SET RCV AND VALVE BOX ASSEMBLY IN GROUND COVER/SHRUB AREA WHERE POSSIBLE. INSTALL IN LAWN ONLY IF GROUND COVER DOES NOT EXIST ADJACENT TO LAWN.
4. SET BOXES PARALLEL TO EACH OTHER AND PERPENDICULAR TO EDGE OF LAWN, WALK, FENCE, CURB, ETC.
5. AVOID HEAVILY COMPACTING SOIL AROUND VALVE BOXES TO PREVENT COLLAPSE AND DEFORMATION OF VALVE BOX SIDES.
6. INSTALL EXTENSION BY VALVE BOX MANUFACTURER AS REQUIRED TO COMPLETELY ENCLOSE ASSEMBLY FOR EASY ACCESS.

1 VALVE BOX INSTALLATION
SCALE: NONE

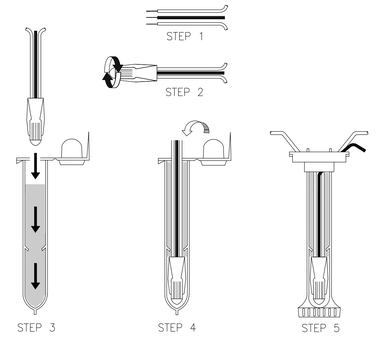

NOTE:
MAXIMUM # OF WIRES PER CONNECTOR:

- 3-#14 GAUGE
- 2-#12 GAUGE

INSTRUCTIONS:

1. STRIP WIRES APPROXIMATELY 1/2" FROM ENDS TO EXPOSE WIRE.
2. TWIST CONNECTOR AROUND WIRES CLOCKWISE UNTIL HAND TIGHT, DO NOT OVERTIGHTEN.
3. INSERT WIRE ASSEMBLY TO BOTTOM OF GEL-FILLED TUBE. CHECK TO MAKE SURE CONNECTOR HAS BEEN PUSHED PAST LOCKING FINGERS AND IS SEATED AT THE BOTTOM OF THE TUBE.
4. PLACE WIRES WHICH EXIT TUBE IN WIRE EXIT HOLES AND CLOSE CAP UNTIL IT SNAPS.
5. INSPECT FINAL SPLICE ASSEMBLY THAT IT IS SECURED.

2 WEATHERPROOF WIRE SPLICE ASSEMBLY
SCALE: NONE

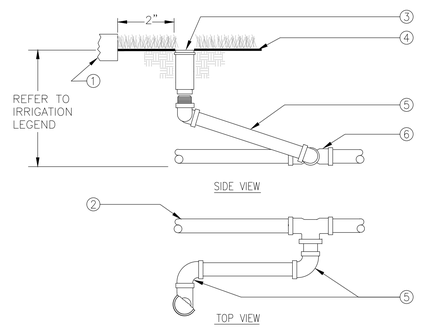

NOTES:

1. SET SPRINKLER 1" ABOVE FINISH GRADE AT TIME OF INSTALLATION - LOWER TO FINISH GRADE WHEN TURF IS WELL ESTABLISHED.

1. WALL, WALK, CURB OR HEADER.
2. PVC LATERAL LINE.
3. POP-UP ROTARY SPRINKLER.
4. FINISH GRADE.
5. UNITIZED SWING JOINT: 3/4"-LASCO MODEL T732-212 1"-LASCO MODEL T932-212.
6. SCHEDULE 40 PVC TEE OR ELBOW WITH THREADED OUTLET.

3 POP-UP ROTARY SPRINKLER - TURF
SCALE: NONE

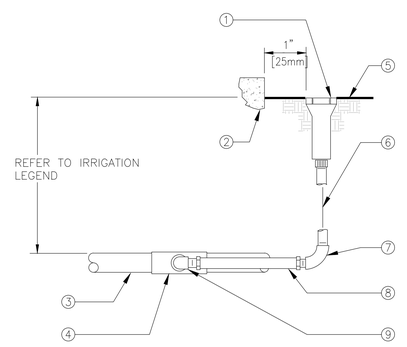

1. POP-UP LAWN SPRAY SPRINKLER.
2. WALL, WALK, CURB OR BUILDING.
3. PVC LATERAL LINE.
4. UPC APPROVED SCHEDULE 40 PVC TEE OR ELBOW.
5. FINISH GRADE.
6. 1/2" [13mm] SCHEDULE 80 PVC THREADED NIPPLE (LENGTH AS REQUIRED - TYPICAL).
7. 1/2" [13mm] SCHEDULE 40 PVC THREADED 90° ELL.
8. 1/2" [13mm] FLEXIBLE IPS HOSE 6" [150mm] LONG WITH MALE ADAPTERS OR 1/2" x 6" [13mm x 150mm] FLEXIBLE SWING JOINT WITH A MINIMUM PRESSURE RATING OF 100 PSI [690kPa]
9. 1/2" [13mm] SCHEDULE 40 PVC STREET ELL.

4 POP-UP SPRAY SPRINKLER - TURF
SCALE: NONE

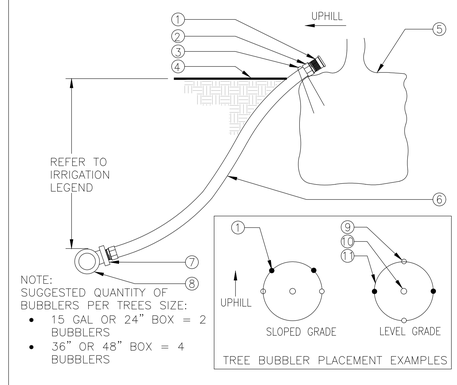

1. BUBBLER (TO BE INSTALLED ON TOP OF ROOTBALL).
2. 1/2" SCH. 40 MALE ADAPTER.
3. 6" STAPLE.
4. FINISH GRADE.
5. TREE ROOTBALL.
6. 1/2" IPS FLEXIBLE PVC.
7. PVC TEE (SST), ELBOW (ST) OR FEMALE ADAPTER.
8. PVC LATERAL LINE.
9. TREE STAKES.
10. TREE.
11. EDGE OF ROOTBALL (TYPICAL).

5 TREE AND SHRUB BUBBLER
SCALE: NONE

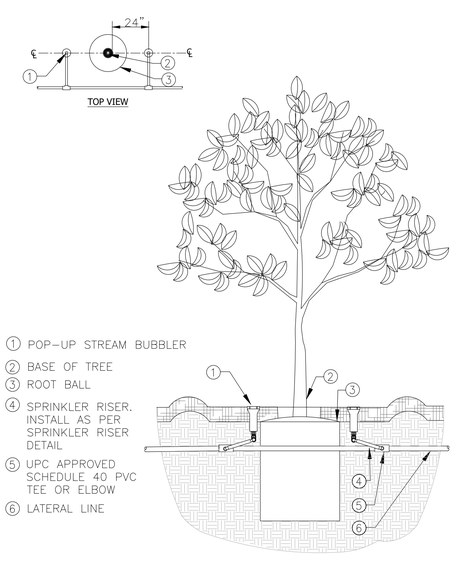

1. POP-UP STREAM BUBBLER
2. BASE OF TREE
3. ROOT BALL
4. SPRINKLER RISER. INSTALL AS PER SPRINKLER RISER DETAIL
5. UPC APPROVED SCHEDULE 40 PVC TEE OR ELBOW
6. LATERAL LINE

6 POP-UP TREE BUBBLER IN DG
SCALE: NONE

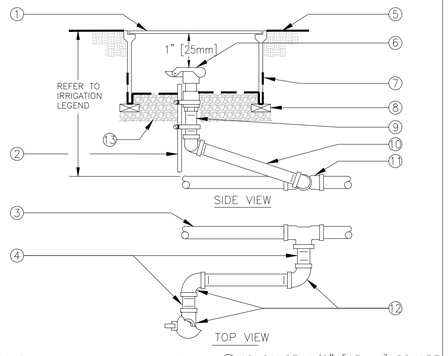

1. 10" ROUND PLASTIC VALVE BOX WITH BOLT DOWN LID.
2. 1 1/4" x 1 1/4" x 3/16" [30mm x 30mm x 5mm] ANGLE IRON 30" [760mm] LONG W/2 STAINLESS STEEL STRAPS (ONE AROUND QCV).
3. PVC MAIN LINE.
4. 3" [75mm] LONG SCHEDULE 80 PVC THREADED NIPPLE.
5. FINISH GRADE.
6. QUICK COUPLING VALVE.
7. 19 GAUGE 1/2" [13mm] SQUARE WIRE MESH.
8. BRICK - 2 TOTAL.
9. SCHEDULE 80 PVC THREADED NIPPLE.
10. 10" [250mm] LONG SCHEDULE 80 PVC THREADED NIPPLE.
11. UPC APPROVED SCHEDULE 40 PVC TEE OR ELBOW.
12. SCHEDULE 80 PVC THREADED 90° ELL.
13. PEA GRAVEL OR 3/4" DRAIN ROCK- 4" [100mm] DEEP BELOW VALVE (NO SOIL IN VALVE BOX).

NOTE:
NIPPLES AND FITTINGS TO BE SAME SIZE AS VALVE IPT INLET THREAD SIZE.

7 QUICK COUPLING VALVE
SCALE: NONE

GROUP 4
ARCHITECTURE
RESEARCH +
PLANNING, INC
211 LINDEN AVENUE
SO. SAN FRANCISCO
CA 94080 USA
650 871 0709

rhaa
LANDSCAPE ARCHITECTURE + PLANNING
325 Geary Street, Suite 402, San Francisco, CA 94102
T 415 861 7900 F 415 861 7908 www.rhaa.com

THE CITY OF BURLINGAME CALIFORNIA INCORPORATED 1908

WASHINGTON PARK PLAYGROUND, SPORTS COURT, AND PICNIC AREA

850 BURLINGAME AVE BURLINGAME CA 94010

LICENSED LANDSCAPE ARCHITECT
Signature
06/06/19
Renewal Date
03/25/19
Date
STATE OF CALIFORNIA

Project Arch.	----
CA REG.	----
PROJECT:	12421-04

ISSUE	DATE
SD SUBMITTAL	11/02/18
BID SET	03/25/19

SHEET TITLE AND NO.
IRRIGATION DETAILS

L6.6

IRRIGATION WATER USE CALCULATIONS

WATER USE ESTIMATION & IRRIGATION SCHEDULE - BURLINGAME COMMUNITY CENTER, PACKAGE 1

WATER TYPE	POTABLE
CITY	Burlingame
ETO	35.1
DATE	3/21/2019

Nearest City to project with published ET data

REGULAR LANDSCAPE AREAS

STATION/HYDROZONE	GPM	AREA (sq.ft) (HA)	WATER USE TYPE (LW=LOW, MW=MOD, HW=HIGH)	PLANT TYPE	IRRIGATION TYPE	PLANT FACTOR (PF)	IRRIGATION EFFICIENCY (IE)	PRECIP. RATE/ APPLICATION RATE (IN/HR)	ETAF (PF/IE)	CYCLES PER DAY	DAYS PER WEEK	JAN	FEB	MAR	APR	MAY	JUNE	JULY	AUG	SEP	OCT	NOV	DEC	ETWU (GALLONS PER YEAR)	PERCENTAGE OF LANDSCAPE
												MONTHLY ETO													
												1.5	1.3	2.4	3.0	3.7	4.6	4.9	4.8	4.1	2.8	1.3	0.7		
												TOTAL RUN TIME IN MINUTES PER DAY													
C-1	6	400	LW	BIOSWALE LW	SPRAY	0.3	0.75	1	0.4	2	2	0.0	0.0	7.0	9.0	11.0	13.0	14.0	14.0	12.0	8.0	4.0	0.0	3,482	2%
C-2	3	701	LW	GRASSES LW	SPRAY	0.3	0.75	1	0.4	2	2	0.0	0.0	7.0	9.0	11.0	13.0	14.0	14.0	12.0	8.0	4.0	0.0	6,102	4%
C-3	6	700	LW	GRASSES LW	SPRAY	0.3	0.75	1	0.4	2	2	0.0	0.0	7.0	9.0	11.0	13.0	14.0	14.0	12.0	8.0	4.0	0.0	6,093	4%
C-4	13	3117	LW	SHRUB GC LW	DRIPLINE12"	0.3	0.81	0.9	0.4	2	2	0.0	0.0	7.0	9.0	11.0	13.0	14.0	14.0	12.0	8.0	4.0	0.0	25,123	16%
C-5	8	700	MW	TREE MW	BUBBLER	0.5	0.81	0.85	0.6	2	3	0.0	0.0	8.0	10.0	13.0	16.0	17.0	16.0	14.0	10.0	5.0	0.0	9,403	4%
C-6	5	518	LW	GRASSES LW	SPRAY	0.3	0.75	1	0.4	2	2	0.0	0.0	7.0	9.0	11.0	13.0	14.0	14.0	12.0	8.0	4.0	0.0	4,509	3%
C-7	7	687	MW	BIOSWALE MW	SPRAY	0.5	0.75	1	0.7	2	3	0.0	0.0	8.0	10.0	12.0	14.0	15.0	15.0	13.0	9.0	4.0	0.0	9,967	3%
C-8	1	150	MW	TREE MW	BUBBLER	0.5	0.81	0.85	0.6	2	3	0.0	0.0	8.0	10.0	13.0	16.0	17.0	16.0	14.0	10.0	5.0	0.0	2,015	1%
C-9	9	2297	LW	SHRUB GC LW	DRIPLINE12"	0.3	0.81	0.9	0.4	2	2	0.0	0.0	7.0	9.0	11.0	13.0	14.0	14.0	12.0	8.0	4.0	0.0	18,514	12%
C-10	17	1440	LW	BIOSWALE LW	SPRAY	0.3	0.75	1	0.4	2	2	0.0	0.0	7.0	9.0	11.0	13.0	14.0	14.0	12.0	8.0	4.0	0.0	12,535	7%
C-11	8	1439	LW	BIOSWALE LW	SPRAY	0.3	0.75	1	0.4	2	2	0.0	0.0	7.0	9.0	11.0	13.0	14.0	14.0	12.0	8.0	4.0	0.0	12,526	7%
C-12	2	606	LW	BIOSWALE LW	SPRAY	0.3	0.75	1	0.4	2	2	0.0	0.0	7.0	9.0	11.0	13.0	14.0	14.0	12.0	8.0	4.0	0.0	5,275	3%
C-13	3	606	LW	BIOSWALE LW	SPRAY	0.3	0.75	1	0.4	2	2	0.0	0.0	7.0	9.0	11.0	13.0	14.0	14.0	12.0	8.0	4.0	0.0	5,275	3%
C-14	5	463	MW	SHRUB GC MW	DRIPLINE12"	0.5	0.81	0.9	0.6	2	3	0.0	0.0	8.0	10.0	12.0	15.0	16.0	15.0	13.0	9.0	5.0	0.0	6,220	2%
C-15	16	1690	LW	GRASSES LW	SPRAY	0.3	0.75	1	0.4	2	2	0.0	0.0	7.0	9.0	11.0	13.0	14.0	14.0	12.0	8.0	4.0	0.0	14,711	9%
C-16	8	591	MW	BIOSWALE MW	SPRAY	0.5	0.75	1	0.7	2	3	0.0	0.0	8.0	10.0	12.0	14.0	15.0	15.0	13.0	9.0	4.0	0.0	8,574	3%
C-17	4	450	LW	SHRUB GC LW	BUBBLER	0.3	0.81	0.85	0.4	2	2	0.0	0.0	8.0	9.0	11.0	14.0	15.0	15.0	13.0	9.0	4.0	0.0	3,627	2%
C-18	8	1831	LW	SHRUB GC LW	DRIPLINE12"	0.3	0.81	0.9	0.4	2	2	0.0	0.0	7.0	9.0	11.0	13.0	14.0	14.0	12.0	8.0	4.0	0.0	14,758	9%
C-19	1	402	LW	GRASSES LW	SPRAY	0.3	0.75	1	0.4	2	2	0.0	0.0	7.0	9.0	11.0	13.0	14.0	14.0	12.0	8.0	4.0	0.0	3,499	2%
C-20	4	403	LW	GRASSES LW	SPRAY	0.3	0.75	1	0.4	2	2	0.0	0.0	7.0	9.0	11.0	13.0	14.0	14.0	12.0	8.0	4.0	0.0	3,508	2%
C-21	5	674	LW	GRASSES LW	SPRAY	0.3	0.75	1	0.4	2	2	0.0	0.0	7.0	9.0	11.0	13.0	14.0	14.0	12.0	8.0	4.0	0.0	5,867	3%
	TOTAL	19,865																					TOTAL	181,584	100%

SPECIAL LANDSCAPE AREAS

HYDROZONE #	HYDROZONE NAME	AREA (sq.ft) (HA)	Percentage of Landscape
			0%

MAWA	GALLONS/YR	194,536
	ACRE FEET/YR	0.60
	HCF/YR	260.07
ETWU	GALLONS/YR	181,584
	ACRE FEET/YR	0.56
	HCF/YR	242.76

SITE IRRIGATION EFFICIENCY	SITE PLANT FACTOR	MAWA COMPLIANT
77.7%	0.33	YES

THE IRRIGATION VALVE SCHEDULE SHOWN ABOVE IS INTENDED TO BE USED AS A GUIDELINE ONLY AND INDICATES THE APPROXIMATE RUN TIMES IN MINUTES FOR EACH VALVE BASED ON ESTIMATED WEEKLY WATER REQUIREMENTS FOR ESTABLISHED PLANT MATERIAL. THE TIMES SHOWN ARE APPROXIMATE AND HAVE BEEN DEVELOPED FROM LOCAL AND CURRENT AVERAGES FOR EVAPOTRANSPIRATION, AND REFLECTTHE WATER REQUIREMENTS OF THE PLANT MATERIAL BASED ON PLANT TYPE AND THE APPROXIMATE PRECIPITATION OR APPLICATION RATES OF THE IRRIGATION SYSTEM TYPE. ACTUAL RUN TIMES MAY BE DIFFERENT DEPENDING ON A VARIETY OF FACTORS INCLUDING TOPOGRAPHY, SOIL STRUCTURE, SUN AND WIND EXPOSURE, WEATHER, ACTUAL PLANT WATER REQUIREMENTS, OVERALL PRECIPITATION RATE OF ZONE, ETC.

MAWA FORMULA
MAXIMUM APPLIED WATER ALLOWANCE (MAWA) GALLONS PER YEAR
MAWA = (ETo)(0.62)[(LA x 0.45) + (0.55 x SLA)]

ETo = REFERENCE EVAPOTRANSPIRATION

0.45= ET ADJUSTMENT FACTOR

LA=LANDSCAPED AREA (SQUARE FEET)
0.62 = CONVERSION FACTOR (GALLONS/SQ.FT/YR)

ETWU FORMULA
ESTIMATED TOTAL WATER USE (ETWU) GALLONS PER YEAR
ETWU= ((ETO)(.62)(ETAF x LA))

ETo = REFERENCE EVAPOTRANSPIRATION

PF = PLANT FACTOR FOR HYDROZONES

HA = HYDROZONE AREA (SQ.FT)
0.62 = CONVERSION FACTOR (GALLONS/SQ.FT/YR)

IE = IRRIGATION EFFICIENCY (0.81)-BUBBLER/DRIP

IE = IRRIGATION EFFICIENCY (0.75)-ROTORS/SPRAY

GROUP 4
ARCHITECTURE
RESEARCH +
PLANNING, INC
211 LINDEN AVENUE
SO. SAN FRANCISCO
CA 94080 USA
650 871 0709

rhaa
LANDSCAPE ARCHITECTURE + PLANNING
385 Sherry Street, Suite 402, San Francisco, CA 94102
T 415 861 7900 F 415 861 7908 www.rhaa.com

WASHINGTON PARK PLAYGROUND, SPORTS COURT, AND PICNIC AREA

**850 BURLINGAME AVE
BURLINGAME
CA 94010**

LICENSED LANDSCAPE ARCHITECT
Signature
04/30/19
Renewal Date
03/25/19
Date
STATE OF CALIFORNIA

Project Arch.	----
CA REG.	----
PROJECT:	12421-04

ISSUE	DATE
SD SUBMITTAL	11/02/18
BID SET	03/25/19

SHEET TITLE AND NO.
IRRIGATION WATER USE CALCULATIONS

L6.7

PLANT SCHEDULE

TREES										
SYMBOL	QTY.	ABBR.	SCIENTIFIC NAME	COMMON NAME	SIZE	WATER USE	HEIGHT	SPREAD	CALIPER	COMMENTS
	1	ARB MAR	ARBUTUS 'MARINA'	STRAWBERRY TREE	36" BOX	LOW	25'-0"	20'-0"	1-3/4" TO 2-1/2"	STD
	2	ARC MAN	ARCTOSTAPHYLOS MANZANITA 'DR. HURD'	COMMON MANZANITA 'DR. HURD'	24" BOX	LOW	14'-0"	13'-0"	1" TO 1-3/4"	MULTI-TRUNK
	1	COR FLO	CORNUS FLORIDA	DOGWOOD	36" BOX	MEDIUM	20'-0"	20'-0"	1-3/4" TO 2-1/2"	STD
	1	DAV INV	DAVIDIA INVOLUCRATA	DOVE TREE	36" BOX	MEDIUM	30'-0"	30'-0"	1-3/4" TO 2-1/2"	STD
	1	FAG SYL	FAGUS SYLVATICA PURPUREA	COPPER BEECH	60" BOX	MEDIUM	60'-0"	50'-0"	N/A	SPECIMEN REE, SEE NOTE 10
	2	LAG IND	LAGERSTROEMIA INDICA 'TUSCARORA'	CRAPE MYRTLE 'TUSCARORA'	24" BOX	MEDIUM	15'-0"	13'-0"	1" TO 1-3/4"	STD
	1	MAG SOU	MAGNOLIA X SOULANGEANA	SAUCER MAGNOLIA	36" BOX	MEDIUM	20'-0"	20'-0"	1-3/4" TO 2-1/2"	STD
	2	MAL FLO	MALUS FLORIBUNDA	CRABAPPLE	24" BOX	MEDIUM	18'-0"	20'-0"	1" TO 1-3/4"	MULTI-TRUNK
	5	OLE EUR	OLEA EUROPAEA 'SWAN HILL'	OLIVE TREE 'SWAN HILL'	36" BOX	LOW	25'-0"	25'-0"	1-3/4" TO 2-1/2"	NON-FRUITING
	6	PIS CHI	PISTACIA CHINENSIS	CHINESE PISTACHE	24" BOX	MEDIUM	30'-0"	25'-0"	1" TO 1-3/4"	STD
	2	PRU BLI	PRUNUS BLIREANA	PURPLE-LEAFED PLUM	24" BOX	MEDIUM	15'-0"	15'-0"	1" TO 1-3/4"	NON-FRUITING
	3	ZEL SER	ZELKOVA SERRATA	ZELKOVA	36" BOX	MEDIUM	65'-0"	65'-0"	1-3/4" TO 2-1/2"	STD

SHRUBS AND GROUNDCOVERS						
SYMBOL	ABBR.	SCIENTIFIC NAME	COMMON NAME	SIZE	SPACING	WATER USE
	ANI	ANIGOZANTHOS 'YELLOW GEM'	KANGAROO PAW	1 GALLON	2'-6"	MEDIUM
	AGA	AGAPANTHUS 'RANCHO WHITE'	AGAPANTHUS	1 GALLON	1'-6"	MEDIUM
	BUL FRU	BULBINE FRUTESCENS	STALKED BULBINE	1 GALLON	2'-0"	LOW
	CAL ACU	CALAMAGROSTIS X ACUTIFLORA 'KARL FOERSTER'	FEATHER REED GRASS	1 GALLON	3'-0"	MEDIUM
	CHA FLO	CHASMANTHE FLORIBUNDA	AFRICAN CORNFLAG	1 GALLON	1'-0"	LOW
	COT COG	COTINUS COGGYGRIA 'ROYAL PURPLE'	PURPLE SMOKE TREE	15 GALLON	AS SHOWN	LOW
	FES CAL	FESTUCA CALIFORNICA	CALIFORNIA FESCUE	1 GALLON	3'-0"	LOW
	FES GLA	FESTUCA GLAUCA 'SISKIYOU BLUE'	BLUE FESCUE	1 GALLON	1'-0"	LOW
	GAU LIN	GAURA LINDHEIMERI	GAURA	1 GALLON	3'-0"	LOW
	GRE LAV	GREVILLEA LAVANDULACEA 'PENOLA'	LAVENDER GREVILLEA	5 GALLON	6'-0"	LOW
	HES PAR	HESPERALOE PARVIFLORA	RED YUCCA	5 GALLON	5'-0"	LOW
	MUH RIG	MUHLENBERGIA RIGENS	DEERGRASS	5 GALLON	6'-0"	LOW
	PER ATR	PEROVSKIA ATRIPLICIFOLIA	RUSSIAN SAGE	1 GALLON	3'-0"	LOW
	RIB SAN	RIBES SANGUINEUM 'INVERNESS WHITE'	RED FLOWERING CURRANT	5 GALLON	AS SHOWN	LOW
	SAL SON	SALVIA SONOMENSIS	SONOMA SAGE	1 GALLON	5'-0"	LOW
	STA BYZ	STACHYS BYZANTINA	LAMB'S EARS	1 GALLON	3'-0"	LOW
	TAG LEM	TAGETES LEMMONII	MEXICAN MARIGOLD	1 GALLON	4'-0"	LOW
BIORENTION PLANTING MIX						
	CAR DEN	CAREX DENSA	DENSE SAGE	1 GALLON	1'-6"	MEDIUM
	CHO TEC	CHONDROPETALUM TECHTORUM	DWARF CAPE RUSH	1 GALLON	4'-0"	LOW
	JUN PAT	JUNCUS PATENS 'ELK BLUE'	ELK BLUE CALIFORNIA GRAY RUSH	1 GALLON	2'-0"	LOW
	MIM AUR	MIMULUS AURANTIACUS	BUSH MONKEY FLOWER	1 GALLON	4'-0"	LOW
	POL MUN	POLYSTICHUM MUNITUM	SWORD FERN	1 GALLON	2'-0"	LOW

PLANTING NOTES

1. REFER TO SPECIFICATIONS FOR SOIL PREPARATION, PLANTING, AND MAINTENANCE PERIOD REQUIREMENTS.
2. CONTRACTOR TO REFER TO PLANT LIST FOR PLANT SIZE AND SPACING. USE TRIANGULAR SPACING UNLESS OTHERWISE NOTED.
3. PLANT QUANTITIES ARE PROVIDED FOR CONTRACTOR'S CONVENIENCE ONLY. CONTRACTOR TO VERIFY ALL PLANT QUANTITIES SHOWN IN PLANTING PLANS.
4. CONTRACTOR TO SUBMIT PLANT SAMPLES FOR APPROVAL BY LANDSCAPE ARCHITECT, SEE SPECS.
5. LANDSCAPE ARCHITECT TO INSPECT PLANTING LAYOUT PRIOR TO INSTALLATION. CONTRACTOR TO PROVIDE 10' X 10' MOCKUP OF ALL PLANT MIXES FOR APPROVAL BY LANDSCAPE ARCHITECT.
6. CONTRACTOR TO VERIFY LOCATION AND DEPTH OF ALL UTILITIES, STRUCTURES, AND IRRIGATION LINES BEFORE DIGGING.
7. GROUNDCOVERS ARE TO EXTEND UNDER TREE AND SHRUB PLANTINGS FOR FULL COVERAGE. SPACE GROUNDCOVER 18" AWAY FROM TREES AND 12" AWAY FROM SHRUBS.
8. SEE GRADING PLAN FOR FINISH GRADES. ALL FINISH GRADES REFER TO FINISH GRADE OF MULCHED LANDSCAPE.
9. ALL PLANTING AREAS, PLANTERS, AND POTS TO RECEIVE 3" OF MULCH, SEE SPECS.
10. OWNER FURNISHED CONTRACTOR INSTALLED. TREE IS LOCATED AT 250 ANZA BLVD, BURLINGAME, CA 94010

GROUP 4
ARCHITECTURE RESEARCH + PLANNING, INC
211 LINDEN AVENUE
SO. SAN FRANCISCO
CA 94080 USA
650 871 0709

rhaa
LANDSCAPE ARCHITECTURE + PLANNING
303 Geary Street, Suite 602, San Francisco, CA 94102
T 415 861 7900 F 415 861 7908 www.rhaa.com

THE CITY OF BURLINGAME CALIFORNIA INCORPORATED 1908

WASHINGTON PARK PLAYGROUND, SPORTS COURT, AND PICNIC AREA

850 BURLINGAME AVE
BURLINGAME
CA 94010

LICENSED LANDSCAPE ARCHITECT
Date of Licensure
Signature
04/30/19
Renewal Date
03/25/19
Date
STATE OF CALIFORNIA

Project Arch.	----
CA REG.	----
PROJECT:	12421-04

ISSUE	DATE
SD SUBMITTAL	11/02/18
BID SET	03/25/19

SHEET TITLE AND NO.
PLANTING NOTES & LEGEND

L7.0

GROUP 4
ARCHITECTURE
RESEARCH +
PLANNING, INC
211 LINDEN AVENUE
SO. SAN FRANCISCO
CA 94080 USA
650·871·0709

rhaa
LANDSCAPE ARCHITECTURE + PLANNING
323 Geary Street, Suite 602, San Francisco, CA 94102
T 415 861 7900 F 415 861 7908 www.rhaa.com

THE CITY OF BURLINGAME CALIFORNIA INCORPORATED 1908

WASHINGTON PARK PLAYGROUND, SPORTS COURT, AND PICNIC AREA

850 BURLINGAME AVE
BURLINGAME
CA 94010

LICENSED LANDSCAPE ARCHITECT
Lincoln Lee
Signature
04/30/19
Renewal Date
03/25/19
Date
STATE OF CALIFORNIA

Project Arch.	----
CA REG.	----
PROJECT:	12421-04

ISSUE	DATE
SD SUBMITTAL	11/02/18
BID SET	03/25/19

SHEET TITLE AND NO.
TREE PLAN

L7.1

GROUP 4
ARCHITECTURE RESEARCH + PLANNING, INC
211 LINDEN AVENUE
SO. SAN FRANCISCO
CA 94080 USA
650 871 0709

rhaa
LANDSCAPE ARCHITECTURE + PLANNING
323 Geary Street, Suite 602, San Francisco, CA 94102
T 415 861 7900 F 415 861 7908 www.rhaa.com

THE CITY OF BURLINGAME CALIFORNIA INCORPORATED 1908

WASHINGTON PARK PLAYGROUND, SPORTS COURT, AND PICNIC AREA

850 BURLINGAME AVE
BURLINGAME
CA 94010

LICENSED LANDSCAPE ARCHITECT
Signature
04/30/19
Renewal Date
03/25/19
Date
STATE OF CALIFORNIA

Project Arch.	----
CA REG.	----
PROJECT:	12421-04

ISSUE	DATE
SD SUBMITTAL	11/02/18
BID SET	03/25/19

SHEET TITLE AND NO.
PLANTING PLAN

L7.2

GROUP 4
ARCHITECTURE
RESEARCH +
PLANNING, INC
211 LINDEN AVENUE
SO. SAN FRANCISCO
CA 94080 USA
650·871·0709

rhaa
LANDSCAPE ARCHITECTURE + PLANNING
323 Geary Street, Suite 602, San Francisco, CA 94102
T 415 861 7900 F 415 861 7908 www.rhaa.com

THE CITY OF BURLINGAME CALIFORNIA INCORPORATED 1908

WASHINGTON PARK PLAYGROUND, SPORTS COURT, AND PICNIC AREA

850 BURLINGAME AVE
BURLINGAME
CA 94010

LICENSED LANDSCAPE ARCHITECT
Registered Lineman
Signature
04/30/19
Renewal Date
03/25/19
Date
STATE OF CALIFORNIA

Project Arch.	----
CA REG.	----
PROJECT:	12421-04

ISSUE	DATE
SD SUBMITTAL	11/02/18
BID SET	03/25/19

SHEET TITLE AND NO.
PLANTING PLAN

L7.3

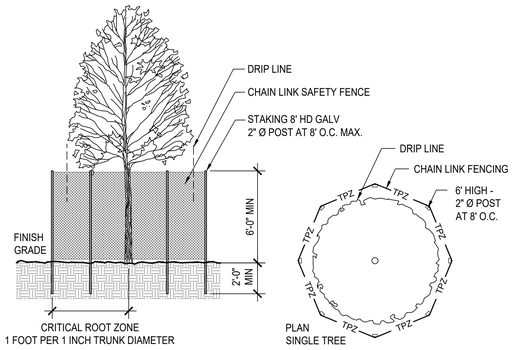

11 TREE PRESERVATION FENCING
SCALE: 1/4" = 1'-0"

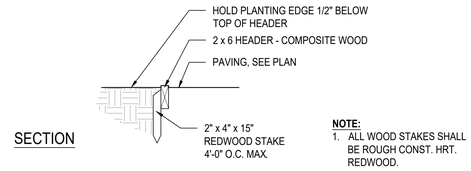

SECTION

NOTE:
1. ALL WOOD STAKES SHALL BE ROUGH CONST. HRT. REDWOOD.

7 WOOD HEADER
SCALE: 3/4" = 1'-0"

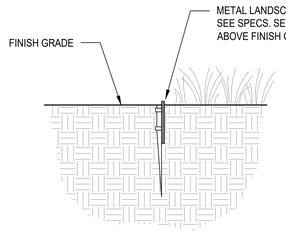

8 METAL HEADER
SCALE: 1-1/2" = 1'-0"

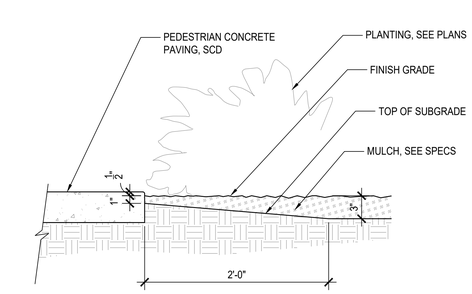

9 MULCH AT CONCRETE PAVING
SCALE: 1-1/2" = 1'-0"

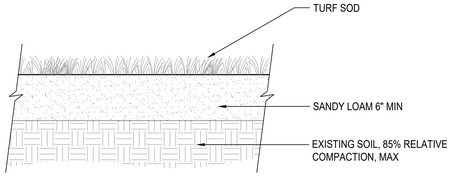

NOTE:
1. SEE SPECS FOR MORE INFORMATION REGARDING PLANT INSTALLATION AND SOIL PREPARATION.

3 TURF
SCALE: 1-1/2" = 1'-0"

NOTE:
1. SEE SPECS. FOR MORE INFORMATION REGARDING PLANT INSTALLATION AND SOIL PREPARATION.

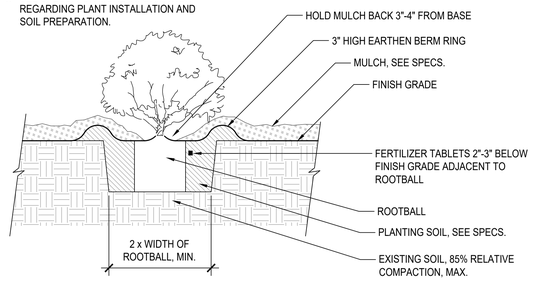

4 SHRUB PLANTING W/ BERM
SCALE: 1" = 1'-0"

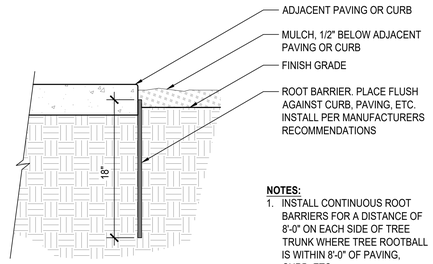

NOTES:
1. INSTALL CONTINUOUS ROOT BARRIERS FOR A DISTANCE OF 8'-0" ON EACH SIDE OF TREE TRUNK WHERE TREE ROOTBALL IS WITHIN 8'-0" OF PAVING, CURB, ETC.

5 ROOT BARRIER
SCALE: 1-1/2" = 1'-0"

NOTE:
1. SEE SPECS FOR MORE INFORMATION REGARDING PLANT INSTALLATION AND SOIL PREPARATION.
2. INSTALL TRIANGULATED PLANT LAYOUT, UNLESS OTHERWISE SHOWN ON PLANS.

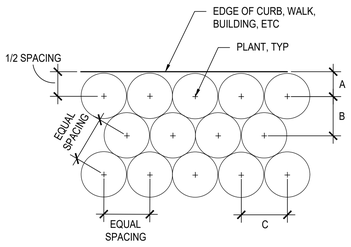

PLANT SPACING	A	B	C
12"	6"	10"	12"
1'-6"	9"	1'-4"	1'-6"
2'-0"	12"	1'-9"	2'-0"
2'-6"	1'-3"	2'-2"	2'-6"
3'-0"	1'-6"	2'-7"	3'-0"
3'-6"	1'-9"	3'-0"	3'-6"
4'-0"	2'-0"	3'-6"	4'-0"
4'-6"	2'-3"	3'-11"	4'-6"
5'-0"	2'-6"	4'-4"	5'-0"

6 PLANTING LAYOUT
NTS

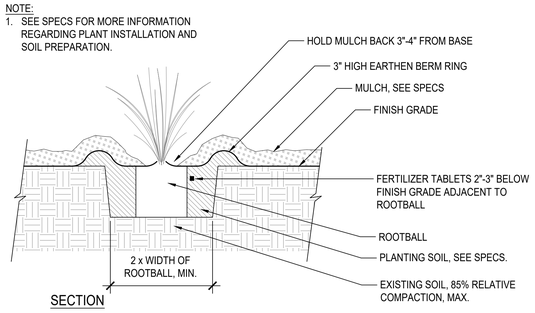

SECTION

10 ORNAMENTAL GRASS W/ BERM
SCALE: 1" = 1'-0"

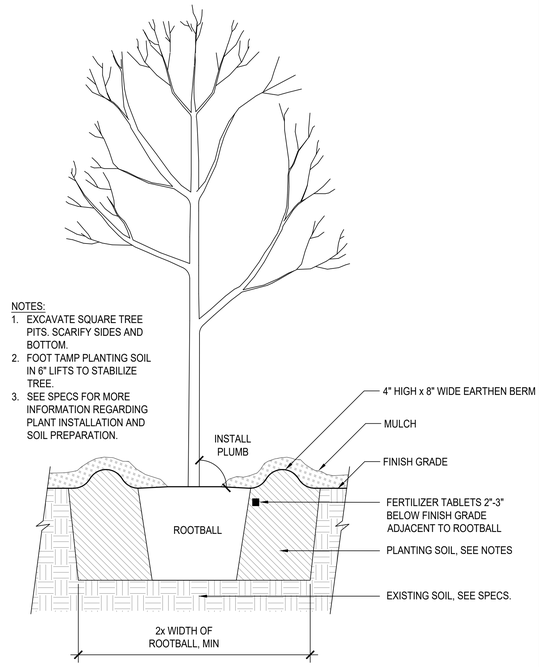

1 TREE PLANTING WITH BERM
NTS

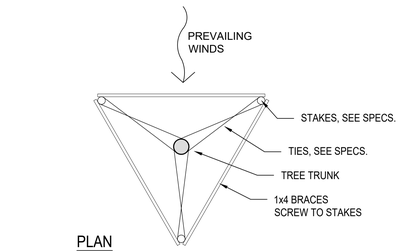

PLAN

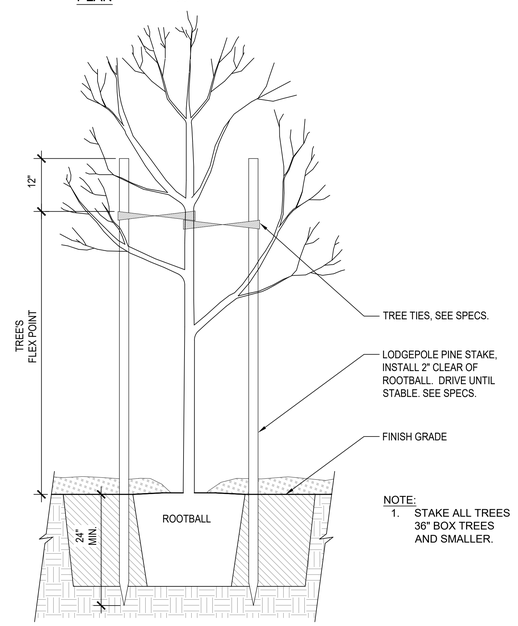

NOTE:
1. STAKE ALL TREES 36" BOX TREES AND SMALLER.

2 TREE STAKING
SCALE: 3/4" = 1'-0"

GROUP 4
ARCHITECTURE
RESEARCH +
PLANNING, INC
211 LINDEN AVENUE
SO. SAN FRANCISCO
CA 94080 USA
650 871 0709

rhaa
LANDSCAPE ARCHITECTURE + PLANNING
303 Geary Street, Suite 602, San Francisco, CA 94102
T 415 861 7900 F 415 861 7908 www.rhaa.com

THE CITY OF BURLINGAME CALIFORNIA INCORPORATED 1908

WASHINGTON PARK PLAYGROUND, SPORTS COURT, AND PICNIC AREA

850 BURLINGAME AVE
BURLINGAME
CA 94010

LICENSED LANDSCAPE ARCHITECT
Signature
04/30/19
Renewal Date
04/26/19
STATE OF CALIFORNIA

Project Arch.	----
CA REG.	----
PROJECT:	12421-04

ISSUE	DATE
SD SUBMITTAL	11/02/18
BID SET	03/25/19

SHEET TITLE AND NO.
PLANTING DETAILS

L7.4

ABBREVIATIONS

A.F.F.	ABOVE FINISHED FLOOR
A.F.G.	ABOVE FINISHED GRADE
C	CONDUIT
CATV	CABLE TV
C.O.	CONDUIT ONLY
CU	COPPER
E.C.	ELECTRICAL CONTRACTOR
E	EMERGENCY LIGHT FIXTURE ON EMERGENCY GENERATOR OR INVERTER, SWITCHABLE, U.O.N.
EM	EMERGENCY LIGHT FIXTURE WITH BATTERY PACK, SWITCHABLE
EMS	ENERGY MANAGEMENT SYSTEM
(E)	EXISTING
EQPT	EQUIPMENT
(ER)	EXISTING EQUIPMENT TO BE RELOCATED
(EX)	EXISTING EQUIPMENT TO BE DISCONNECTED AND REMOVED
EXT	EXTERIOR
FMC	FLEXIBLE METALLIC CONDUIT
GFI	GROUND FAULT CIRCUIT INTERRUPTING TYPE RECEPTACLE
IDF	INTERMEDIATE DISTRIBUTION FRAME
L	LOCKABLE
LV	LOW VOLTAGE
MCB	MAIN CIRCUIT BREAKER
MDF	MAIN DISTRIBUTION FRAME
MFR	MANUFACTURER
MLO	MAIN LUGS ONLY
MTD	MOUNTED
(N)	NEW
N.E.C.	NATIONAL ELECTRICAL CODE
NEU	NEUTRAL
N.I.E.C.	NOT IN ELECTRICAL CONTRACT
O.A.H.	OVERALL HEIGHT
O.F.C.I.	OWNER FURNISHED, CONTRACTOR INSTALLED
P	INDICATES FIXTURES ON PHOTOCELL CONTROL
PA	PUBLIC ADDRESS
PNL	PANEL
S.A.D.	SEE ARCHITECTURAL DRAWINGS
STC	SIGNAL TERMINAL CABINET
TC	INDICATES FIXTURES ON TIMECLOCK CONTROL
TELE	TELEPHONE
TVSS	TRANSIENT VOLTAGE SURGE SUPPRESSION
U.O.N.	UNLESS OTHERWISE NOTED
VAV	VAV BOX, SEE MECHANICAL DIVISION DRAWINGS FOR LOCATIONS. PROVIDE TOGGLE TYPE DISCONNECT SWITCH
WP	WEATHER PROOF, NEMA 3R
WPIU	WEATHER PROOF WHILE IN USE

SYMBOLS LIST

ALL SWITCH AND CONTROL MOUNTING HEIGHTS OF 48" SHALL BE TO TOP OF THE DEVICE BOX. ALL RECEPTACLES WITH MOUNTING HEIGHT OF UP TO 18" SHALL BE NO LOWER THAN 15" TO BOTTOM OF THE DEVICE BOX, TYPICAL, U.O.N.

- AA1 — INDICATES LUMINAIRE TYPE, SEE LUMINAIRE SCHEDULE
- WALL MOUNTED LUMINAIRE
- STEPLIGHT RECESSED FLUSH IN WALL
- POLE ARM-MOUNTED AREA LUMINAIRE; ARROW INDICATES DIRECTION OF LIGHT DISTRIBUTION WHEN NOT PARALLEL TO ARM ORIENTATION
- POLE ARM-MOUNTED PEDESTRIAN-SCALE WALKWAY OR AREA LUMINAIRE; ARROW INDICATES DIRECTION OF LIGHT DISTRIBUTION
- POST-TOP PEDESTRIAN-SCALE AREA LUMINAIRE; ARROW INDICATES DIRECTION OF LIGHT DISTRIBUTION
- BOLLARD LUMINAIRE; ARROW INDICATES DIRECTION OF LIGHT DISTRIBUTION
- FLUSH IN-GROUND LANDSCAPE OR BUILDING UPLIGHT, NON-ADJUSTABLE AIMING
- FLUSH IN-GROUND LANDSCAPE OR BUILDING UPLIGHT WITH ADJUSTABLE AIMING FEATURE; ARROW INDICATES AIMING DIRECTION
- FLUSH IN-GROUND WALLWASH UPLIGHT; OPEN AREA INDICATES DIRECTION OF ILLUMINATION
- STEM MOUNTED SIGN LIGHT
- $a — LINE VOLTAGE SINGLE POLE TOGGLE SWITCH, LETTER ADJACENT INDICATES RESPECTIVE ZONE CONTROLLED, UP 48" U.O.N.
- MAIN SWITCHBOARD, DISTRIBUTION PANEL
- FLUSH MOUNTED PANELBOARD, 6'-6" TO TOP
- SURFACE MOUNTED PANELBOARD, 6'-6" TO TOP
- FUSED EQUIPMENT DISCONNECT SWITCH WITH FUSE SIZE AS RECOMMENDED BY EQUIPMENT MANUFACTURER
- MOTOR WITH FLEXIBLE CONDUIT CONNECTION AND DISCONNECT
- T — TRANSFORMER
- CONCRETE PULLBOX, SIZE AS REQUIRED OR SHOWN - CHRISTY OR EQUAL WITH LABELED LID PER USE
- COPPER GROUND ROD
- FLUSH WALL MOUNTED JUNCTION BOX, UP 18" U.O.N.
- 20A 3PG 125V DUPLEX RECEPTACLE, UP 18" U.O.N.
- 20A 3PG 125V DUPLEX RECEPTACLE, WEATHERPROOF, UP 18" U.O.N.
- GFI — 20A 3PG 125V DUPLEX RECEPTACLE, GROUND FAULT CIRCUIT INTERRUPTER TYPE, UP 18" U.O.N.
- 20A 3PG 125V DOUBLE DUPLEX RECEPTACLE, UP 18" U.O.N.
- WEATHERPROOF ENCLOSURE
- CONDUIT AND WIRE CONCEALED IN CEILING OR WALL
- CONDUIT AND WIRE CONCEALED IN OR UNDER SLAB OR UNDERGROUND
- CONDUIT AND WIRE RUN EXPOSED
- CROSSMARKS INDICATE QUANTITY OF #12 CONDUCTORS PLUS PARITY SIZED GROUND CONDUCTOR (INCLUDED BUT NOT INDICATED), NO HASHMARKS INDICATES (2) #12 CONDUCTORS PLUS PARITY SIZED GROUND CONDUCTOR, U.O.N.
- GROUND WIRE
- {#10} — WIRE SIZE 10 AWG FOR ALL CONDUCTORS, INCLUDING GROUND WIRE, THROUGHOUT THE COMPLETE CIRCUIT
- FLEXIBLE METALLIC CONDUIT
- HOMERUN TO PANELBOARD OR TERMINAL BOARD, AS NOTED ON PLANS
- COMPLETE CONNECTION OF EQUIPMENT
- CONDUIT STUBBED OUT, CAPPED AND MARKED, SEE 6/ES7.1
- CONDUIT TURNED UP, SEE 3/ES7.1
- CONDUIT TURNED DOWN
- G — #4/0 COPPER GROUNDING ELECTRODE CONDUCTOR, U.O.N.
- 3 / E-6 — DETAIL DESIGNATION - SEE DETAIL 3, SHEET E-6
- 1 — NUMBERED SHEET NOTE
- M — UTILITY METER
- CT'S — CURRENT TRANSFORMERS
- 30A / 3P — CIRCUIT BREAKER. NUMBER INDICATES 30A 3-POLE
- 1504N — FEEDER SIZE - SEE POWER SINGLE LINE DIAGRAMS & FEEDER SCHEDULE

GENERAL NOTES

1. PRIOR TO BID THE CONTRACTOR SHALL VISIT THE SITE TO ADEQUATELY DETERMINE ALL PRE-EXISTING CONDITIONS. BY THE ACT OF SUBMITTING A BID, THE CONTRACTOR WILL BE DEEMED TO HAVE COMPLIED WITH THE FOREGOING, TO HAVE ACCEPTED SUCH CONDITIONS, AND TO HAVE MADE ALLOWANCES THEREFORE IN PREPARING THE BID.
2. PROVIDE PARITY SIZED GREEN GROUND WIRE IN ALL POWER CONDUITS, BRANCH CIRCUITS (LIGHTING & POWER) AND HOMERUNS. PROVIDE ADDITIONAL ISOLATED GROUND, GREEN WITH YELLOW STRIPE, TO ALL ISOLATED GROUND RECEPTACLES.
3. PROVIDE PULLROPE IN ALL EMPTY CONDUITS THROUGHOUT THE PROJECT.
4. REFER TO ARCHITECTURAL PLANS AND ELEVATIONS FOR EXACT LOCATION & CONNECTION REQUIREMENTS OF ALL LUMINAIRE(S) AND ALL OUTLET, SWITCH, AND ELECTRICAL RELATED DEVICE MOUNTING HEIGHTS AND LOCATIONS. COORDINATE LOCATIONS OF ALL LUMINAIRE(S) AND JUNCTION BOXES WITH MECHANICAL DIVISION PRIOR TO ROUGH-IN. COORDINATE LOCATIONS OF ELECTRICAL DEVICES WITH FURNITURE PLANS PRIOR TO ROUGH-IN.
5. VERIFY EXACT CONNECTION REQUIREMENTS, OUTLET TYPE(S), MOUNTING HEIGHT(S) AND LOCATION(S) OF ALL OWNER-SUPPLIED EQUIPMENT, AND ALL EQUIPMENT PROVIDED UNDER OTHER SECTIONS OF THE SPECIFICATIONS, PRIOR TO ROUGH-IN. REFER TO ARCHITECTURAL DRAWINGS FOR EQUIPMENT LOCATIONS.
6. COORDINATE TRENCHING WITH OWNER AND OTHER TRADES BEFORE BEGINNING WORK.
7. ALL CONDUIT PENETRATIONS THROUGH FIRE-RATED WALLS AND FLOORS SHALL BE SEALED AND EQUIPPED WITH U.L. LISTED FIRE PENETRATION ASSEMBLIES TO MAINTAIN FIRE SEPARATION RATING.
8. MAINTAIN "AS-BUILT" RECORDS AT ALL TIMES, SHOWING EXACT LOCATION OF ALL UNDERGROUND AND/OR CONCEALED CONDUITS AND SERVICES INSTALLED UNDER THIS CONTRACT, INCLUDING CIRCUIT IDENTIFICATION WHERE APPLICABLE. PROVIDE OWNER WITH "AS-BUILT" DOCUMENTS AS INDICATED IN THE SPECIFICATIONS, AND/OR CALLED FOR IN THE SPECIFICATIONS.
9. DRAWINGS INDICATE THE LOCATION(S) OF DEVICES, LUMINAIRE(S) AND EQUIPMENT, AND THE CIRCUIT NUMBER AND PANEL DESIGNATED TO SUPPLY THEM. THE CONTRACTOR SHALL BE RESPONSIBLE FOR COMPLETELY CONNECTING ALL ELECTRICAL DEVICES TO CIRCUITS INDICATED ON THE DRAWINGS.
10. UNLESS OTHERWISE NOTED, ALL WORK SHOWN ON DRAWINGS IS NEW AND TO BE PROVIDED AND INSTALLED COMPLETE UNDER THIS CONTRACT.
11. ALL EQUIPMENT GROUNDING SHALL CONFORM TO ARTICLE 250 OF THE NATIONAL ELECTRICAL CODE, LATEST EDITION.
12. ALL EXTERIOR CONDUIT ABOVE GRADE, INCLUDING ALL ROOF MOUNTED CONDUIT, SHALL BE GALVANIZED RIGID STEEL. COAT ALL EXPOSED THREADS WITH GALVANIZING PAINT. PAINT ALL SURFACE MOUNTED RACEWAYS AND PULLBOXES TO MATCH SURROUNDING CONDITIONS, AS DIRECTED BY THE ARCHITECT.
13. ALL ELECTRICAL WORK SHALL BE CARRIED OUT IN ACCORDANCE WITH THE LATEST EDITION OF THE N.E.C., AS WELL AS STATE, AND LOCAL CODES AND REQUIREMENTS.
14. ALL CONDUIT SHALL BE CONCEALED, UNLESS OTHERWISE NOTED.
15. PROVIDE A DEDICATED NEUTRAL CONDUCTOR FOR ALL BRANCH CIRCUITS.
16. ALL CONDUIT CONNECTORS TO OUTLET OR JUNCTION BOXES SHALL HAVE INSULATED THROATS (MANUFACTURED AS AN INTEGRAL PART OF THE CONNECTOR). AFTER-MARKET INSERTABLE THROATS ARE NOT ACCEPTABLE.
17. ALL CIRCUITS IN ALL JUNCTION BOXES AND DEVICES SHALL BE CLEARLY IDENTIFIED BY MEANS OF "EZ" NUMBERING TAGS OR EQUIVALENT, TO IDENTIFY THE CIRCUIT NUMBER OR RELAY SUPPLYING THE CONDUCTOR. ALL JUNCTION BOXES SHALL BE LABELED PER SPECIFICATIONS.
18. FOR OUTDOOR 15 AND 20-AMPERE, 125 AND 250-VOLT RECEPTACLES: RECEPTACLES LOCATED IN "WET" LOCATIONS SHALL HAVE "IN-USE" TYPE WEATHERPROOF COVER PLATES PROVIDED AND INSTALLED; RECEPTACLES LOCATED IN "DAMP" LOCATIONS SHALL HAVE "IN-USE" TYPE WEATHERPROOF COVER PLATES IN LOCATIONS DEEMED TO BE "IN-USE" WITH CORD AND PLUG ATTACHED.

LUMINAIRE SCHEDULE

TYPE	MOUNTING	DESCRIPTION	MANUFACTURER CATALOG #	LIGHT SOURCE	POWER SUPPLY	VOLTS	INPUT WATTS
AB2	POLE	POST TOP MOUNTED SITE PEDESTRIAN POLE. TWO PIECE CAST ALUMINUM CONSTRUCTION. PRECISION INJECTION MOLDED ACRYLIC OPTICS WITH IES TYPE II DISTRIBUTION. 25-3/4"H X 25-5/16" DIA CURVED TOP HELD BY 3 CURVED STRUTS. TEMPERED GLASS VANDAL SHIELD. TENON MOUNT TO ALUMINUM ROUND TAPERED POLE; 10'H X 5" DIA SHAFT WITH 3" O.D. TOP, GROUND LUG, AND 0.188 WALL THICKNESS. STANDARD COLOR TO BE SELECTED BY THE ARCHITECT. AVAILABLE STANDARD COLORS: GREY, BRONZE, BLACK, DARK PLATINUM, GRAPHITE METALLIC, WHITE.	COOPER INVUE ARBOR: LUMINAIRE: ARB-B2-LED-D1-T2-COLOR-8030-VS POLE: ARP-5-M-3-10-A-COLOR-2-X-G	3000K / 80CRI LEDS 3994 LM	INTEGRAL 0-10V DIMMING	120/277V	48W
AB4	POLE	SIMILAR TO TYPE AB2 EXCEPT WITH IES TYPE IV DISTRIBUTION.	COOPER INVUE ARBOR: LUMINAIRE: ARB-B2-LED-D1-T4-COLOR-8030-VS POLE: ARP-5-M-3-10-A-COLOR-2-X-G	3000K / 80CRI LEDS 4691 LM	INTEGRAL 0-10V DIMMING	120/277V	48W
AB5	POLE	SIMILAR TO TYPE AB2 EXCEPT WITH IES TYPE V DISTRIBUTION.	COOPER INVUE ARBOR: LUMINAIRE: ARB-B2-LED-D1-T5-COLOR-8030-VS POLE: ARP-5-M-3-10-A-COLOR-2-X-G	3000K / 80CRI LEDS 4529 LM	INTEGRAL 0-10V DIMMING	120/277V	48W
AD1	GROUND	GROUND MOUNTED TREE UPLIGHT IN PLANTER. BLACK POLYMER HOUSING, LONGITUDINALLY WATER TIGHT 20' POWER CABLE. HIGH POWER LEDS. COLLIMATING OPTICAL POLYMER LENS. BLACK LAQUERED ALUMINUM REFLECTOR WITH 40 DEG CUT-OFF. STAINLESS STEEL COVER TRIM WITH FLUSH SAFETY GLASS LENS. 7-1/8" DIA X 6-1/4"D. PROVIDE BLACK POLYMER RECESSED HOUSING.	ERCO TESIS: 33409.023-MOD 20' CABLE 33298.000 HOUSING	3000K / 92CRI LEDS 630 LM	NON-DIM	120V	8W

CALIFORNIA GREEN BUILDING STANDARDS COMPLIANCE

ALL EXTERIOR LUMINAIRES SPECIFIED IN THESE CONTRACT DOCUMENTS COMPLY WITH THE REQUIREMENTS OF THE CALIFORNIA ENERGY CODE AND THE CALIFORNIA GREEN BUILDING STANDARDS CODE, SECTION A5.106.8 LIGHT POLLUTION REDUCTION. EXTERIOR LUMINAIRES COMPLY WITH BACKLIGHT, UPLIGHT, AND GLARE (BUG) RATINGS AS DEFINED IN IESNA TM-15-11 AND BUG RATINGS DO NOT EXCEED THE MAXIMUM ALLOWABLE RATINGS FOR THIS PROJECT.

LIST OF DRAWINGS

ES0.1 SYMBOLS LIST, GENERAL NOTES & LIST OF DRAWINGS
ES1.1 SITE PLAN - ELECTRICAL
ES7.1 DETAILS
ES8.1 TITLE 24 DOCUMENTS

GROUP 4
ARCHITECTURE RESEARCH + PLANNING, INC
211 LINDEN AVENUE
SO. SAN FRANCISCO
CA 94080 USA
650·871·0709

O'MAHONY & MYER
ELECTRICAL ENGINEERING and LIGHTING DESIGN
4340 REDWOOD HWY., SUITE 245
SAN RAFAEL, CALIFORNIA 94903
(415) 492-0420/FAX (415) 479-9662
www.ommconsulting.com

THE CITY OF BURLINGAME CALIFORNIA INCORPORATED 1908

BURLINGAME COMMUNITY CENTER PACKAGE 1

850 BURLINGAME AVE
BURLINGAME
CA 94010

REGISTERED PROFESSIONAL ENGINEER — No.14738 — Exp. 8/19 — ELECTRICAL — STATE OF CALIFORNIA

Project Arch.	----
CA REG.	----
PROJECT:	12421-03

ISSUE	DATE
BID SET	03/25/2019

SHEET TITLE AND NO.

SYMBOLS LIST, GENERAL NOTES, LIST OF DRAWINGS, LUMINAIRE SCHEDULE

ES0.1

BURLINGAME COMMUNITY CENTER – 218080\CAD\PACKAGE NUMBER 1

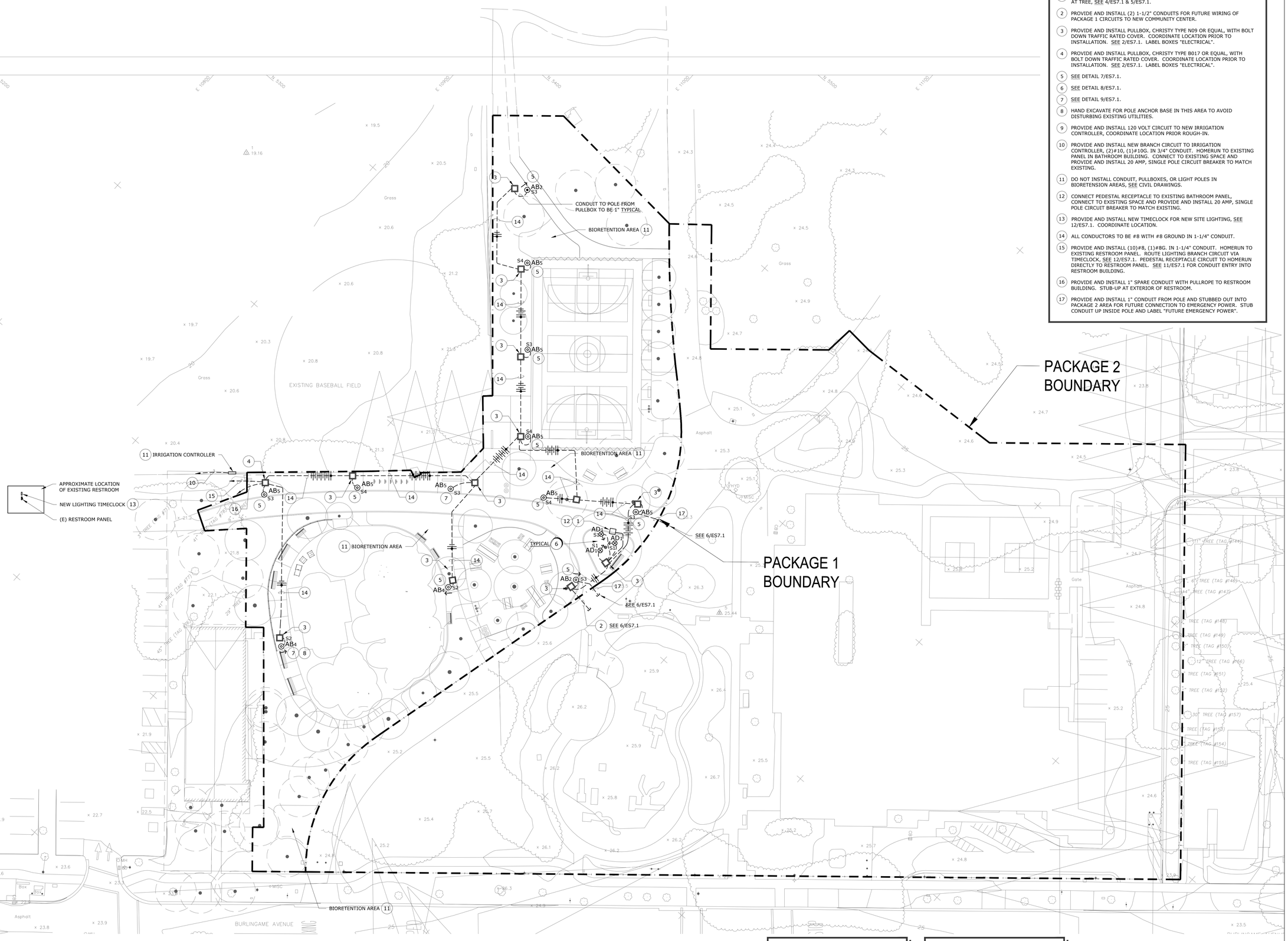

NUMBERED SHEET NOTES

1. PROVIDE AND INSTALL PEDESTAL RECEPTACLE FOR SEASONAL LIGHTING AT TREE, SEE 4/ES7.1 & 5/ES7.1.
2. PROVIDE AND INSTALL (2) 1-1/2" CONDUITS FOR FUTURE WIRING OF PACKAGE 1 CIRCUITS TO NEW COMMUNITY CENTER.
3. PROVIDE AND INSTALL PULLBOX, CHRISTY TYPE N09 OR EQUAL, WITH BOLT DOWN TRAFFIC RATED COVER. COORDINATE LOCATION PRIOR TO INSTALLATION. SEE 2/ES7.1. LABEL BOXES "ELECTRICAL".
4. PROVIDE AND INSTALL PULLBOX, CHRISTY TYPE B017 OR EQUAL, WITH BOLT DOWN TRAFFIC RATED COVER. COORDINATE LOCATION PRIOR TO INSTALLATION. SEE 2/ES7.1. LABEL BOXES "ELECTRICAL".
5. SEE DETAIL 7/ES7.1.
6. SEE DETAIL 8/ES7.1.
7. SEE DETAIL 9/ES7.1.
8. HAND EXCAVATE FOR POLE ANCHOR BASE IN THIS AREA TO AVOID DISTURBING EXISTING UTILITIES.
9. PROVIDE AND INSTALL 120 VOLT CIRCUIT TO NEW IRRIGATION CONTROLLER, COORDINATE LOCATION PRIOR ROUGH-IN.
10. PROVIDE AND INSTALL NEW BRANCH CIRCUIT TO IRRIGATION CONTROLLER, (2)#10, (1)#10G. IN 3/4" CONDUIT. HOMERUN TO EXISTING PANEL IN BATHROOM BUILDING. CONNECT TO EXISTING SPACE AND PROVIDE AND INSTALL 20 AMP, SINGLE POLE CIRCUIT BREAKER TO MATCH EXISTING.
11. DO NOT INSTALL CONDUIT, PULLBOXES, OR LIGHT POLES IN BIORETENSION AREAS, SEE CIVIL DRAWINGS.
12. CONNECT PEDESTAL RECEPTACLE TO EXISTING BATHROOM PANEL, CONNECT TO EXISTING SPACE AND PROVIDE AND INSTALL 20 AMP, SINGLE POLE CIRCUIT BREAKER TO MATCH EXISTING.
13. PROVIDE AND INSTALL NEW TIMECLOCK FOR NEW SITE LIGHTING, SEE 12/ES7.1. COORDINATE LOCATION.
14. ALL CONDUCTORS TO BE #8 WITH #8 GROUND IN 1-1/4" CONDUIT.
15. PROVIDE AND INSTALL (10)#8, (1)#8G. IN 1-1/4" CONDUIT. HOMERUN TO EXISTING RESTROOM PANEL. ROUTE LIGHTING BRANCH CIRCUIT VIA TIMECLOCK, SEE 12/ES7.1. PEDESTAL RECEPTACLE CIRCUIT TO HOMERUN DIRECTLY TO RESTROOM PANEL. SEE 11/ES7.1 FOR CONDUIT ENTRY INTO RESTROOM BUILDING.
16. PROVIDE AND INSTALL 1" SPARE CONDUIT WITH PULLROPE TO RESTROOM BUILDING. STUB-UP AT EXTERIOR OF RESTROOM.
17. PROVIDE AND INSTALL 1" CONDUIT FROM POLE AND STUBBED OUT INTO PACKAGE 2 AREA FOR FUTURE CONNECTION TO EMERGENCY POWER. STUB CONDUIT UP INSIDE POLE AND LABEL "FUTURE EMERGENCY POWER".

SITE PLAN - ELECTRICAL
SCALE: 1" = 20'-0"
1 / ES1.1

SEE 1/ES7.1 FOR TYPICAL TRENCH DETAILS.

SEE 12/ES7.1 FOR LIGHTING CONTROL DIAGRAM.

GROUP 4
ARCHITECTURE RESEARCH + PLANNING, INC
211 LINDEN AVENUE
SO. SAN FRANCISCO
CA 94080 USA
650·871·0709

O'MAHONY & MYER
ELECTRICAL ENGINEERING and LIGHTING DESIGN
4340 REDWOOD HWY., SUITE 245
SAN RAFAEL, CALIFORNIA 94903
(415) 492-0420/FAX (415) 479-9662
www.ommconsulting.com

BURLINGAME COMMUNITY CENTER PACKAGE 1

850 BURLINGAME AVE
BURLINGAME
CA 94010

REGISTERED PROFESSIONAL ENGINEER
P. J. COLENDER
No.14738
Exp. 6/19
ELECTRICAL
STATE OF CALIFORNIA

Project Arch.	----
CA REG.	----
PROJECT:	12421-03

ISSUE	DATE
BID SET	03/25/2019

SHEET TITLE AND NO.
SITE PLAN - ELECTRICAL

ES1.1

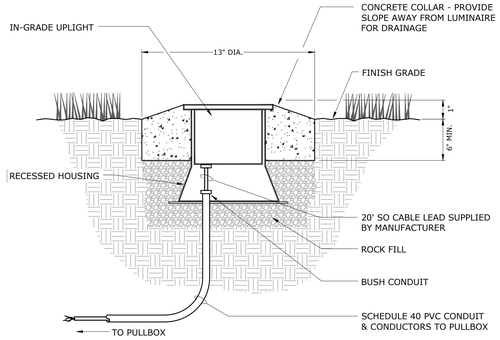

GROUND MOUNTED UPLIGHT IN LANDSCAPE AREAS

8 / ES7.1

SCALE: NONE
FILE: L:\LIGHT\GROUND\LGROU015 (MODIFIED FOR 218080)

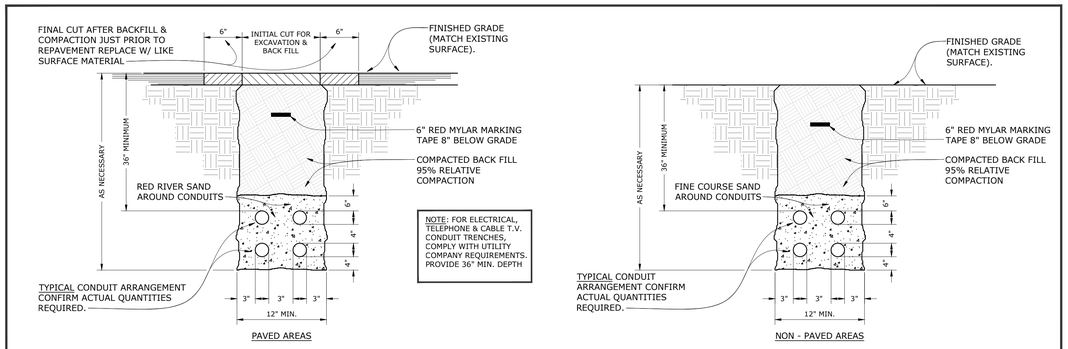

TYPICAL TRENCH SECTIONS

1 / ES7.1

SCALE: NONE
FILE: L:\POWER\TRENCH\PTREN005 (MODIFIED FOR 218080)

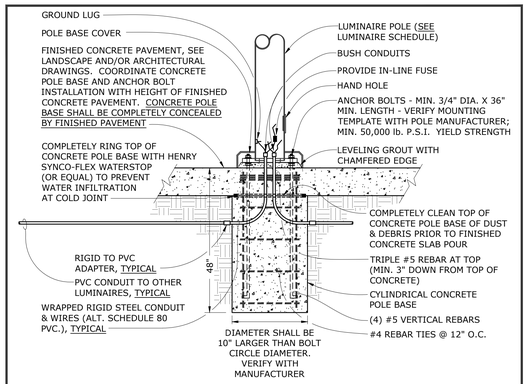

POLE BASE IN CONCRETE PAVING

9 / ES7.1

SCALE: NOT TO SCALE
FILE: L:\DETAILS\LIGHT\POLEBASE\LPOLE015

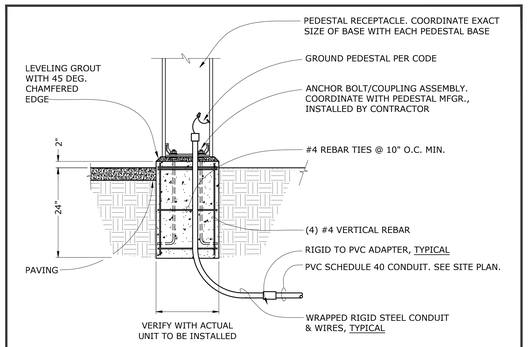

PEDESTAL BASE

5 / ES7.1

SCALE: NONE
FILE: (MODIFIED FOR 218080)

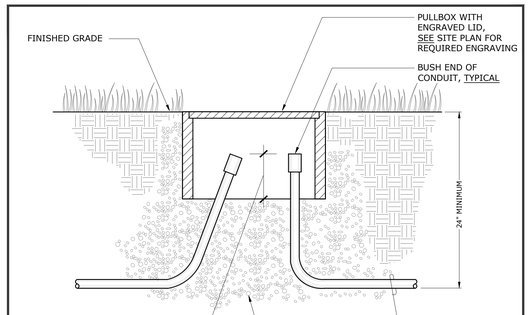

PULLBOX/CONDUIT INSTALLATION DETAIL

2 / ES7.1

SCALE: NONE
FILE: L:\DETAILS\POWER\CONDUIT\PCOND019 (MODIFIED FOR 218080)

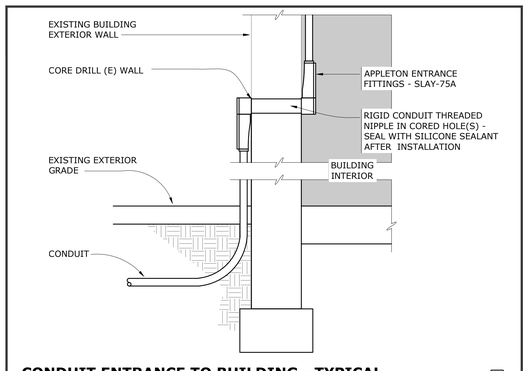

CONDUIT ENTRANCE TO BUILDING - TYPICAL

11 / ES7.1

SCALE: NONE
FILE: L:\DETAILS\POWER\CONDUIT\PCOND041 (MODIFIED FOR 218080)

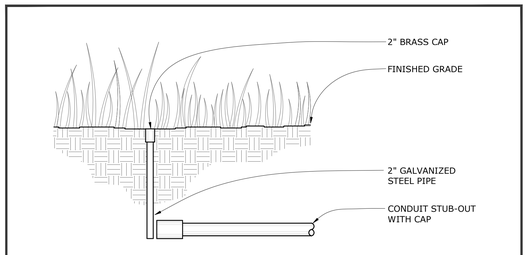

NOTES:

1. ENGRAVE BRASS CAP INDICATING FUNCTION & FINAL DESTINATION
2. RECORD ALL ACTUAL STUB-OUT LOCATIONS ON AS-BUILT DRAWINGS

CONDUIT STUB-OUT

6 / ES7.1

SCALE: NOT TO SCALE
FILE: L:\DETAILS\POWER\CONDUIT\PCOND005

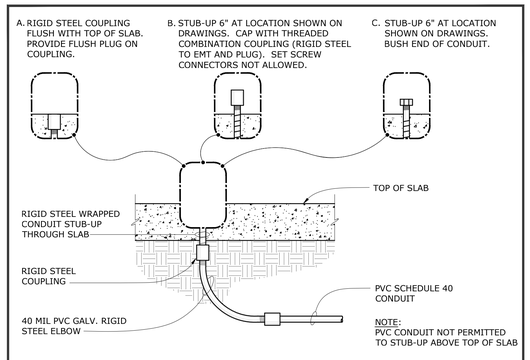

CONDUIT STUB-UP DETAILS

3 / ES7.1

SCALE: NONE
FILE: L:\POWER\CONDUIT\PCOND007 (MODIFIED FOR 218080)

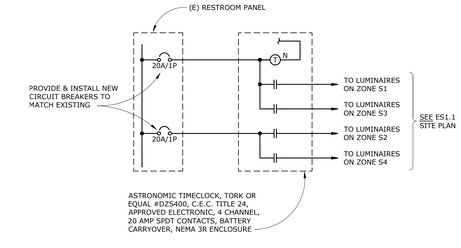

LIGHTING CONTROL DIAGRAM

12 / ES7.1

SCALE: NONE

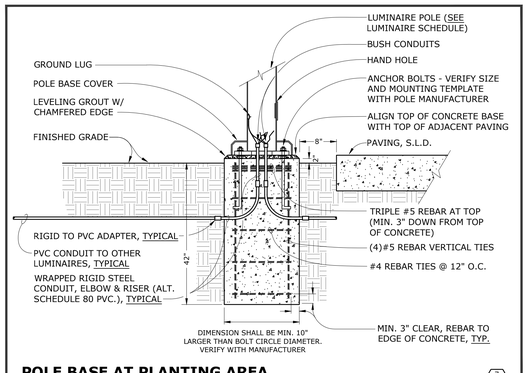

POLE BASE AT PLANTING AREA

7 / ES7.1

SCALE: NOT TO SCALE
FILE: L:\DETAILS\LIGHT\POLEBASE\LPOLE028

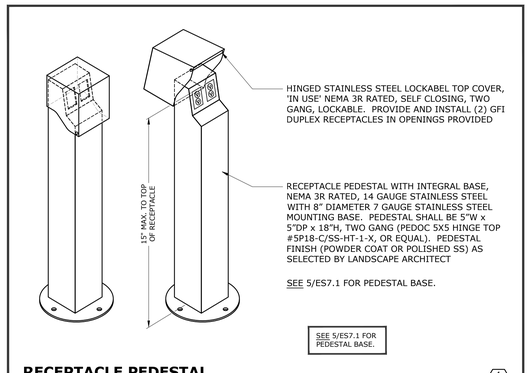

RECEPTACLE PEDESTAL

4 / ES7.1

SCALE: NOT TO SCALE
FILE: L:\DETAILS\POWER\PEDESTALS\PPEDE001

GROUP 4
ARCHITECTURE
RESEARCH +
PLANNING, INC
211 LINDEN AVENUE
SO. SAN FRANCISCO
CA 94080 USA
650·871·0709

O'MAHONY & MYER
ELECTRICAL ENGINEERING and LIGHTING DESIGN
4340 REDWOOD HWY., SUITE 245
SAN RAFAEL, CALIFORNIA 94903
(415) 492-0420/FAX (415) 479-9662
www.ommconsulting.com

BURLINGAME COMMUNITY CENTER PACKAGE 1

850 BURLINGAME AVE
BURLINGAME
CA 94010

REGISTERED PROFESSIONAL ENGINEER COLEMAN No.14738 Exp. 6/19 ELECTRICAL STATE OF CALIFORNIA

Project Arch.	----
CA REG.	----
PROJECT:	12421-03
ISSUE	DATE
BID SET	03/25/2019

SHEET TITLE AND NO.

DETAILS

ES7.1

STATE OF CALIFORNIA
Outdoor Lighting
NRCC-LTO-E (Created 9/17) — CALIFORNIA ENERGY COMMISSION

CERTIFICATE OF COMPLIANCE		NRCC-LTO-E
Project Name: Burlingame Community Center Package 1	Report Page:	Page 4 of 6
Project Address: 850 Burlingame Avenue	Date Prepared:	3/13/2019

J. LIGHTING ALLOWANCE: PER APPLICATION

This Section Does Not Apply

K. LIGHTING ALLOWANCE: SALES FRONTAGE

This Section Does Not Apply

L. LIGHTING ALLOWANCE: ORNAMENTAL

This Section Does Not Apply

M. LIGHTING ALLOWANCE: PER SPECIFIC AREA

This Section Does Not Apply

N. EXISTING CONDITIONS POWER ALLOWANCE (alterations only)

This Section Does Not Apply

O. DECLARATION OF REQUIRED CERTIFICATES OF INSTALLATION

Table Instructions: Selections have been made based on information provided in previous tables of this document. If any selection needs to be changed, please explain why in Table E. Additional Remarks. These documents must be provided to the building inspector during construction and can be found online at http://www.energy.ca.gov/2015publications/CEC-400-2015-033/appendices/forms/NRCI

YES	NO	Form/Title	Field Inspector Pass	Field Inspector Fail
◉	○	NRCI-LTO-01-E - Must be submitted for all buildings.	☐	☐
◉	○	NRCI-LTO-02-E - Must be submitted for a lighting control system; or for an Energy Management Control System (EMCS), to be recognized for compliance.	☐	☐

STATE OF CALIFORNIA
Outdoor Lighting
NRCC-LTO-E (Created 9/17) — CALIFORNIA ENERGY COMMISSION

CERTIFICATE OF COMPLIANCE		NRCC-LTO-E
Project Name: Burlingame Community Center Package 1	Report Page:	Page 5 of 6
Project Address: 850 Burlingame Avenue	Date Prepared:	3/13/2019

P. DECLARATION OF REQUIRED CERTIFICATES OF ACCEPTANCE

Table Instructions: Selections have been made based on information provided in previous tables of this document. If any selection needs to be changed, please explain why in Table E. Additional Remarks. These documents must be provided to the building inspector during construction and must be completed through an Acceptance Test Technician Certification Provider (ATTCP). For more information visit: http://www.energy.ca.gov/title24/attcp/providers.html

YES	NO	Form/Title	Field Inspector Pass	Field Inspector Fail
◉	○	NRCA-LTO-02-A - Must be submitted for all outdoor lighting controls except for alterations where controls area added to ≤ 20 luminaires.	☐	☐

STATE OF CALIFORNIA
Outdoor Lighting
NRCC-LTO-E (Created 9/17) — CALIFORNIA ENERGY COMMISSION

CERTIFICATE OF COMPLIANCE		NRCC-LTO-E
Project Name: Burlingame Community Center Package 1	Report Page:	Page 6 of 6
Project Address: 850 Burlingame Avenue	Date Prepared:	3/13/2019

DOCUMENTATION AUTHOR'S DECLARATION STATEMENT

Documentation Author Name:	Pieter Colenbrander	Documentation Author Signature:	P. Colenbrander
Company:	O'Mahony & Myer	Signature Date:	3/13/2019
Address:	4340 Redwood Hwy, Suite 245	CEA/ HERS Certification Identification (if applicable):	E14738
City/State/Zip:	San Rafael, CA 94903	Phone:	415-492-0420

RESPONSIBLE PERSON'S DECLARATION STATEMENT

I certify the following under penalty of perjury, under the laws of the State of California:

1. **The information provided on this Certificate of Compliance is true and correct.**
2. **I am eligible under Division 3 of the Business and Professions Code to accept responsibility for the building design or system design identified on this Certificate of Compliance (responsible designer)**
3. **The energy features and performance specifications, materials, components, and manufactured devices for the building design or system design identified on this Certificate of Compliance conform to the requirements of Title 24, Part 1 and Part 6 of the California Code of Regulations.**
4. **The building design features or system design features identified on this Certificate of Compliance are consistent with the information provided on other applicable compliance documents, worksheets, calculations, plans and specifications submitted to the enforcement agency for approval with this building permit application.**
5. **I will ensure that a completed signed copy of this Certificate of Compliance shall be made available with the building permit(s) issued for the building, and made available to the enforcement agency for all applicable inspections. I understand that a completed signed copy of this Certificate of Compliance is required to be included with the documentation the builder provides to the building owner at occupancy.**

Responsible Designer Name:	Pieter Colenbrander	Responsible Designer Signature:	P. Colenbrander
Company :	O'Mahony & Myer	Date Signed:	3/13/2019
Address:	4340 Redwood Hwy, Suite 245	License:	E14738
City/State/Zip:	San Rafael, CA 94903	Phone:	415-492-0420

STATE OF CALIFORNIA
Outdoor Lighting
NRCC-LTO-E (Created 9/17) — CALIFORNIA ENERGY COMMISSION

CERTIFICATE OF COMPLIANCE		NRCC-LTO-E
This document is used to demonstrate compliance with requirements in §110.9, §130.0, §130.2, §140.7, and §141.0(b)2L for outdoor lighting scopes using the prescriptive path.		
Project Name: Burlingame Community Center Package 1	Report Page:	Page 1 of 6
Project Address: 850 Burlingame Avenue	Date Prepared:	3/13/2019

A. GENERAL INFORMATION

01	Project Location (city)	Burlingame	04	Total Illuminated Hardscape Area (ft²)	8,183
02	Climate Zone	3			

03 Outdoor Lighting Zone per Title 24, Part 1 §10-114 or as designated by Authority Having Jurisdiction (AHJ):

☐ LZ-0: Very Low - Undeveloped Parkland ☐ LZ-2: Moderate - Rural Areas ☐ LZ-4: High - Must be reviewed by CA Energy Commission for Approval
☐ LZ-1: Low - Developed Parkland ☑ LZ-3: Moderately High - Urban Areas

B. PROJECT SCOPE

Table Instructions: Include any outdoor lighting systems that are within the scope of the permit application and are demonstrating compliance using the prescriptive path outlined in §140.7 or §141.0(b)2L for alterations.

My project consists of:

01	02
☑ New Lighting System	Must Comply with Allowances from §140.7.
☐ Altered Lighting System	Is your alteration increasing the connected lighting load (Watts)? ○ Yes ○ No

[1] *FOOTNOTES: % of Existing Luminaires Being Altered = (Sum Total of Luminaires Being Added or Altered / Existing Luminaires within the Scope of the Permit Application) x 100*

C. COMPLIANCE RESULTS

Table Instructions: If any cell on this table says "DOES NOT COMPLY" or "COMPLIES with Exceptional Conditions" refer to Table D. for guidance.

Calculation of Total Allowed Lighting Power (Watts) §140.7 or §141.0(b)2L												Compliance Results		
01		02		03		04		05		06		07		08	09
General Hardscape Allowance §140.7(d)1	+	Per Application §140.7(d)2	+	Sales Frontage §140.7(d)2	+	Ornamental §140.7(d)2	+	Per Specific Area §140.7(d)2	OR	Existing Power §141.0(b)2L	=	**Total Allowed** (Watts)	≥	**Total Actual** (Watts)	**07 Must be ≥ 08**
(See Table I)		(See Table J)		(See Table K)		(See Table L)		(See Table M)		(See Table N)				(See Table F)	
1,363.22	+		+		+		+		OR		=	1,363.22	≥	528	**COMPLIES**
Cutoff Compliance (See Table G for Details)												**Not Applicable**			
Controls Compliance (See Table H for Details)												**COMPLIES**			

STATE OF CALIFORNIA
Outdoor Lighting
NRCC-LTO-E (Created 9/17) — CALIFORNIA ENERGY COMMISSION

CERTIFICATE OF COMPLIANCE		NRCC-LTO-E
Project Name: Burlingame Community Center Package 1	Report Page:	Page 2 of 6
Project Address: 850 Burlingame Avenue	Date Prepared:	3/13/2019

D. EXCEPTIONAL CONDITIONS

This table is auto-filled with uneditable comments because of selections made or data entered in tables throughout the form.

No exceptional conditions apply to this project.

E. ADDITIONAL REMARKS

This table includes remarks made by the permit applicant to the Authority Having Jurisdiction.

F. OUTDOOR LIGHTING FIXTURE SCHEDULE

Table Instructions: For new or altered lighting systems demonstrating compliance with §140.7 (ie Table I has expanded for input), include all luminaires being installed and any existing luminaires remaining or being moved within the spaces covered by the permit application in the Table below. For altered lighting systems using the Existing Power method per §141.0(b)2L (ie Table N has expanded for input), include only new luminaires being installed and replacement luminaires being installed as part of the project scope (ie, do not include existing luminaires remaining or existing luminaires being moved).

Designed Wattage:

01 Name or Item Tag	02 Complete Luminaire Description	03 Watts per luminaire[1]	04 How Wattage is determined	05 Total number luminaires	06 Luminaire Status[2]	07 Excluded per §140.7(a)	08 Design Watts	09 Cutoff Req. > 150W §130.2(b)[3]	10 Field Inspector Pass	10 Field Inspector Fail
AB2	AB2 - LED 0-10V DIM	48	Mfr. Spec[3]	2	New	☐	96		☐	☐
AB4	AB4 - LED 0-10V DIM	48	Mfr. Spec[3]	2	New	☐	96		☐	☐
AB5	AB5 - LED 0-10V DIM	48	Mfr. Spec[3]	7	New	☐	336		☐	☐
						Total Designed Watts:	**528**			

* NOTES: Selections with a * require a note in the space below explaining how compliance is achieved.
EX: Luminaire is lighting a statue; EXCEPTION 2 to §130.2(b).

G. CUTOFF REQUIREMENTS (BUG)

This Section Does Not Apply

H. OUTDOOR LIGHTING CONTROLS

STATE OF CALIFORNIA
Outdoor Lighting
NRCC-LTO-E (Created 9/17) — CALIFORNIA ENERGY COMMISSION

CERTIFICATE OF COMPLIANCE		NRCC-LTO-E
Project Name: Burlingame Community Center Package 1	Report Page:	Page 3 of 6
Project Address: 850 Burlingame Avenue	Date Prepared:	3/13/2019

Table Instructions: Complete this table demonstrating compliance with controls requirements for all new or altered luminaires installed as part of the permit application. For alteration projects, luminaires which are existing to remain (ie untouched) and luminaires which are removed and reinstalled (wiring only) do not need to be included in this table even if they are within the spaces covered by the permit application.
*When an option having a * is selected, the notes section of this table must be completed. The lighting controls section of the Compliance Summary Table on the first page will show "DOES NOT COMPLY" if the notes are left blank. For each requirement in columns 02 through 07, do not leave the field blank, instead select NA or Exempt* from the dropdown list to indicate not applicable or an exemption.*

Mandatory Controls

01 Area Description	02 Motion Sensor: Incandescent>100W §130.2(a)	03 Shut-Off §130.2(c)1	04 Auto-Schedule §130.2(c)2	05 Motion Sensor §130.2(c)3	06 Sales Frontage §130.2(c)4	07 Façade, Ornament, Outdoor Dining §130.2(c)5	08 Field Inspector Pass	08 Field Inspector Fail
Future Elec Rm	NA: No Incand>100W	Astronomical Time	Yes	NA: Poles75W	NA: No Sales Front Ltg	No Applicable Lt	☐	☐

*NOTES: Controls with a * require a note in the space below explaining how compliance is achieved.
EX: Not permitted by health & safety to be turned off; EXCEPTION 1 to §130.2(c).

I. LIGHTING POWER ALLOWANCE (per §140.7)

Table Instructions: Please complete this table for areas using the allowance calculations per §140.7. General Hardscape Allowance is per Table 140.7-A while "Use it or lost it" Allowances are per Table 140.7-B. Indicate which allowances are being used to expand sections for user input. Luminaires that qualify for one of the "Use it or lose it" allowances shall not qualify for another "Use it or lose it" allowance.

	01				
	General Hardscape Allowance	"Use it or lose it" Allowance (Watts)			
	☑	☐ Per Application	☐ Sales Frontage	☐ Ornamental	☐ Per Specific Area
	Table I (below)	Table J	Table K	Table L	Table M

Calculated General Hardscape Lighting Power Allowance per Table 140.7-A

02 Area Description	03 Area Wattage Allowance (AWA) Illuminated Area (ft²)	04 Allowed Density (W/ft²)	05 Area Allowance (Watts)	06 Linear Wattage Allowance (LWA) Perimeter Length (lf)	07 Allowed Density (W/lf)	08 Linear Allowance (Watts)	09 Total General AWA + LWA (Watts)
Walkway	4,464	0.04	178.56	1,049	0.35	367.15	545.71
Walkway/Sport Court	3,719	0.04	148.76	425	0.35	148.75	297.51
					Initial Wattage Allowance for Entire Site (Watts):		**520**
					Total General Hardscape Allowance (Watts):		**1,363.22**

GROUP 4
ARCHITECTURE
RESEARCH +
PLANNING, INC
211 LINDEN AVENUE
SO. SAN FRANCISCO
CA 94080 USA
650·871·0709

O'MAHONY & MYER
ELECTRICAL ENGINEERING and LIGHTING DESIGN
4340 REDWOOD HWY, SUITE 245
SAN RAFAEL, CALIFORNIA 94903
(415) 492-0420/FAX (415) 479-9662
www.ommconsulting.com

THE CITY OF BURLINGAME CALIFORNIA INCORPORATED 1908

BURLINGAME COMMUNITY CENTER PACKAGE 1

850 BURLINGAME AVE BURLINGAME CA 94010

REGISTERED PROFESSIONAL ENGINEER P. COLENBRANDER No. 14738 Exp. 6/19 ELECTRICAL STATE OF CALIFORNIA

Project Arch.	....
CA REG.	....
PROJECT:	12421-03
ISSUE	DATE
BID SET	03/25/2019

SHEET TITLE AND NO.

TITLE 24 DOCUMENTS

ES8.1